TMU140055CL8xxB

33” LINEARHO DC MODULE, 1400mA MAX CURRENT

- Extruded Aluminum material for thermal management
- Magnets pre-mounted, for ease of installation
- High lumen, high efficacy
- Accessories: Diffused lens and End-Caps available

- For use in UL Class 2 lighting systems
- Suitable for DLC applications: L70>54,000hrs / L90=39,000hrs
- Meets UL8750 recognized
- RoHS compliant
- The module is supplied by short circuit proof SELV controlgear

General Specifications

	Min.	Typical	Max.
Input Voltage ①	30.7VDC	33.3VDC	35.8VDC
Input Current ①	150mA	700mA	1400mA
Input Power ①	4.6W	23.3W	50.1W
Initial Lumens @4000K / 80CRI	983 lumens	4,306 lumens	8,386 lumens
Initial Lm/W @4000K / 80CRI	213 lm/W	185 lm/W	167 lm/W

Beam Angle	120°
CRI	80CRI
Storage Temperature Range	-40°C to 100°C / -40°F to 212°F
Operating Ambient Temperature Range (ta)	-40°C to 55°C / -40°F to 131°F
Maximum Case Temperature (Tc)	L70: Tc max 105°C / L90: Tc max 105°C
Estimated Lumen Maintenance ②	L70: >54,000Hrs / L90: 39,000Hrs
Color Consistency	Binning per ANSI C78.377-2015 @ 25°C; 3 SDCM
Overall Size	33.1” x 1.73” x 0.39” (840mm x 44mm x 10mm)
PCB Material / Thermal Conductivity	CEM3 (CCP-308) High Thermal Conductive/ 1.5W/mK
Extruded Material / Finish	Aluminum/surface treatment with Anodic Oxidation
LED Quantity	108pcs.
Module Weight	172g / 0.38lb.
PCB Part Number	PTL019C01C3
Magnets Quantity / Magnetic Force	3 / 2N (.45lbf) per magnet
Maximum Screw Installation Torque	25 inch - ounces
Connector Type	WAGO #744-392 (2 pin connector)
Packaging: Master Carton	20pcs.
Thermal Feedback	Not Available
Safety/Compliance	cURus (File # E351548)
	Suitable for UL Class 2 Lighting System
	RoHS Compliant
	Dry and Damp Location
	CE (IEC 62031: 2008. AMD1: 2012, AMD2: 2014)
	SELV
Energy Efficiency Label (EEI-Label)	C
Warranty	5 years @ Max. Tc from the date of manufacture

①Nominal ratings. Performance based on Tc mod = 25°C. See thermal de-rating chart (pg. 3) for higher temperature operation.

②TM-21 Reported Numbers

TMU140055CL8xxB

RoHS COMPLIANT

Electrical and Optical Specifications

LED Module Part Number	Number of LED	Input Current	Nom. Forward Voltage	Nom. Rated Power	Max. Fwd. Voltage	Max. Rated Power	Nom. Lum. Flux @4000K/80 CRI	Nom. Efficacy @4000K/80 CRI
TMU140055CL8xxB (33")	108	150 mA	30.7 VDC	4.6 W	34 VDC	5 W	983 lm	213 lm/W
		200 mA	31.0 VDC	6.2 W	34 VDC	7 W	1290 lm	208 lm/W
		250 mA	31.2 VDC	7.8 W	34 VDC	9 W	1595 lm	204 lm/W
		300 mA	31.5 VDC	9.4 W	35 VDC	11 W	1900 lm	201 lm/W
		350 mA	31.7 VDC	11.1 W	35 VDC	12 W	2204 lm	199 lm/W
		400 mA	31.9 VDC	12.8 W	35 VDC	14 W	2507 lm	196 lm/W
		450 mA	32.2 VDC	14.5 W	35 VDC	16 W	2809 lm	194 lm/W
		500 mA	32.4 VDC	16.2 W	36 VDC	18 W	3110 lm	192 lm/W
		550 mA	32.6 VDC	17.9 W	36 VDC	20 W	3410 lm	190 lm/W
		600 mA	32.8 VDC	19.7 W	36 VDC	22 W	3710 lm	188 lm/W
		650 mA	33.1 VDC	21.5 W	36 VDC	23 W	4008 lm	187 lm/W
		700 mA	33.3 VDC	23.3 W	37 VDC	26 W	4306 lm	185 lm/W
		750 mA	33.5 VDC	25.1 W	37 VDC	28 W	4603 lm	183 lm/W
		800 mA	33.7 VDC	26.9 W	37 VDC	30 W	4899 lm	182 lm/W
		850 mA	33.9 VDC	28.8 W	37 VDC	31 W	5194 lm	180 lm/W
		900 mA	34.1 VDC	30.7 W	37 VDC	33 W	5489 lm	179 lm/W
		950 mA	34.3 VDC	32.6 W	38 VDC	36 W	5782 lm	178 lm/W
		1000 mA	34.4 VDC	34.4 W	38 VDC	38 W	6075 lm	176 lm/W
		1050 mA	34.6 VDC	36.4 W	38 VDC	40 W	6367 lm	175 lm/W
		1100 mA	34.8 VDC	38.3 W	38 VDC	42 W	6658 lm	174 lm/W
		1150 mA	35.0 VDC	40.2 W	38 VDC	44 W	6948 lm	173 lm/W
		1200 mA	35.2 VDC	42.2 W	39 VDC	47 W	7237 lm	172 lm/W
		1250 mA	35.3 VDC	44.1 W	39 VDC	49 W	7526 lm	170 lm/W
		1300 mA	35.5 VDC	46.1 W	39 VDC	51 W	7813 lm	169 lm/W
		1350 mA	35.6 VDC	48.1 W	39 VDC	53 W	8100 lm	168 lm/W
		1400 mA*	35.8 VDC	50.1 W	39 VDC	55 W	8386 lm	167 lm/W

Luminous Flux De-Rating: CCT and CRI Multipliers

	2700K	3000K	3500K	4000K	5000K	5700K	6500K
CRI 80(R9> 0)	0.924	0.951	0.965	1.000	1.014	1.007	1.000
CRI 90(R9>50)	0.774	0.836	0.829	0.850	0.864	0.864	0.850

NOTES:

1) Performance based on Tc mod = 25°C. See thermal de-rating chart (pg. 3) for higher temperature operation
2) Standard lumen output and efficacy is calculated for standard options. Reference CCT & CRI vs Luminous Flux chart for lumen ratio calculation.
3) Specifications are subject to change without notice.
4) The LED DC Module can be configure with different LED chip quantities, series and parallel design configurations to meet a specific design requirement. Contact Fulham for further assistance.
5) * Indicates maximum rated current. Modules may be operated at a current less than or equal to this value, below the Tc rating.
6) 70CRI is NOT available.

TMU140055CL8xxB

Thermal Specifications

	LinearHO Module
Storage Temperature Range	-40 to +100°C / -40 to +212°F
Operating Ambient Temperature Range (ta)	-40 to 55°C / -40 to 131°F
Maximum Case Temperature (Tc)	L70 = 105°C (221°F) / L90 = 105°C (221°F)

Thermal De-Rating:

Tc vs. Luminous Flux vs. Forward Voltage

Module Case Temperature (Tc)	Total Vf Multiplier	Luminous Flux Multiplier
25ºC	1.000	1.000
30ºC	0.998	0.995
35ºC	0.996	0.990
40ºC	0.994	0.985
45ºC	0.992	0.979
50ºC	0.990	0.974
55ºC	0.988	0.968
60ºC	0.986	0.962
65ºC	0.985	0.956
70ºC	0.983	0.950
75ºC	0.981	0.944
80ºC	0.979	0.938
85ºC	0.977	0.931
90ºC	0.975	0.925
95ºC	0.974	0.918
100ºC	0.972	0.911
105ºC	0.970	0.904

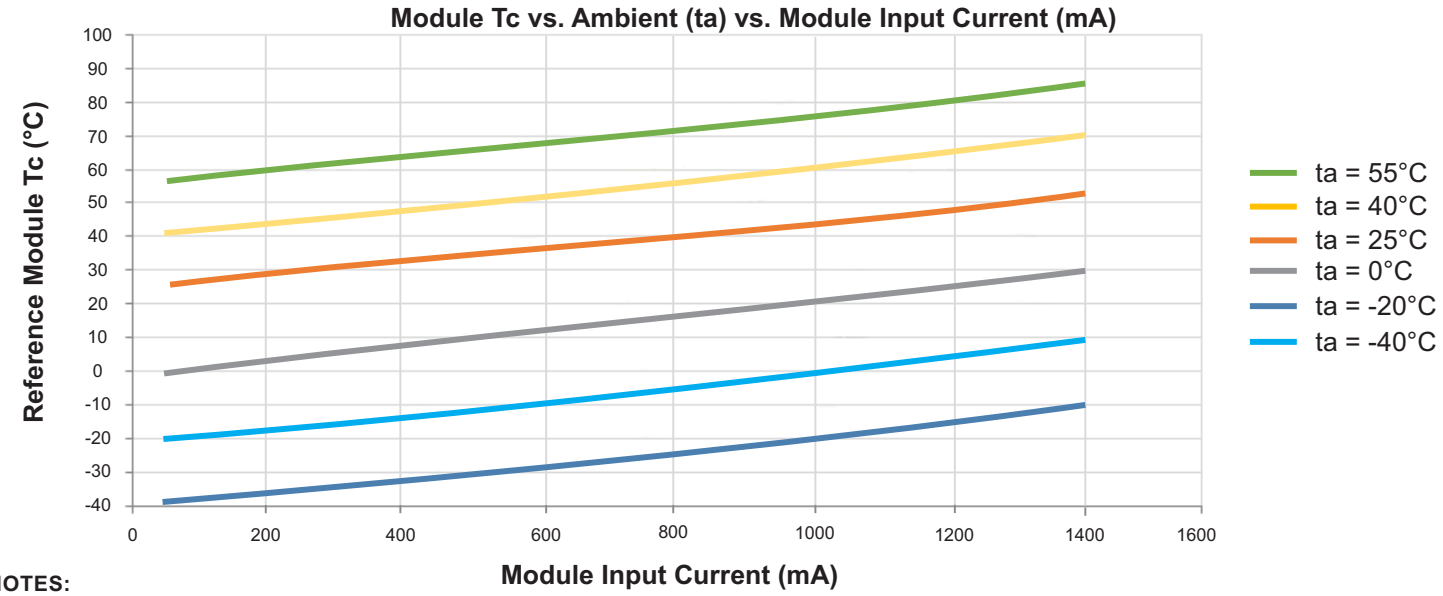

NOTES:

1) Chart "Module Tc vs. Ambient (ta) vs. Module Input Current (mA)" for referance only in an open ambient. The performance with in a luminaire will vary depending on the size and material of luminaire.

TMU140055CL8xxB

Certification Chart

Classification \ Model	TMU140055CL8xxB
RoHS COMPLIANT	YES
c UL us	YES
CE UK CA	YES
Energy Efficiency Label (EEI-Label)	C
Suitable for UL Class 2 Lighting System	YES

Energy Star™ TM-21 Calculator Data

Tc Module	Reported L70	Reported L90
55°C	>54,000 Hrs	53,000 Hrs
85°C	>54,000 Hrs	43,000 Hrs
105°C	>54,000 Hrs	39,000 Hrs

Tc Module	Calculated L70	Calculated L90
55°C	174,000 Hrs	53,000 Hrs
85°C	142,000 Hrs	43,000 Hrs
105°C	127,000 Hrs	39,000 Hrs

LED Lumen & Color Maintenance Data per LM-80 report and TM-21 Calculator

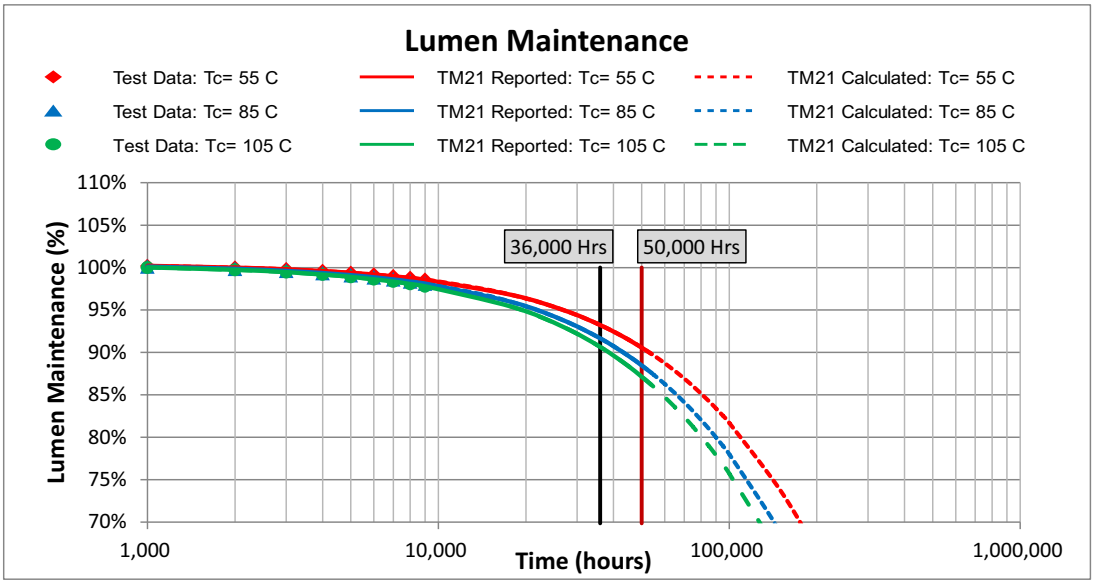

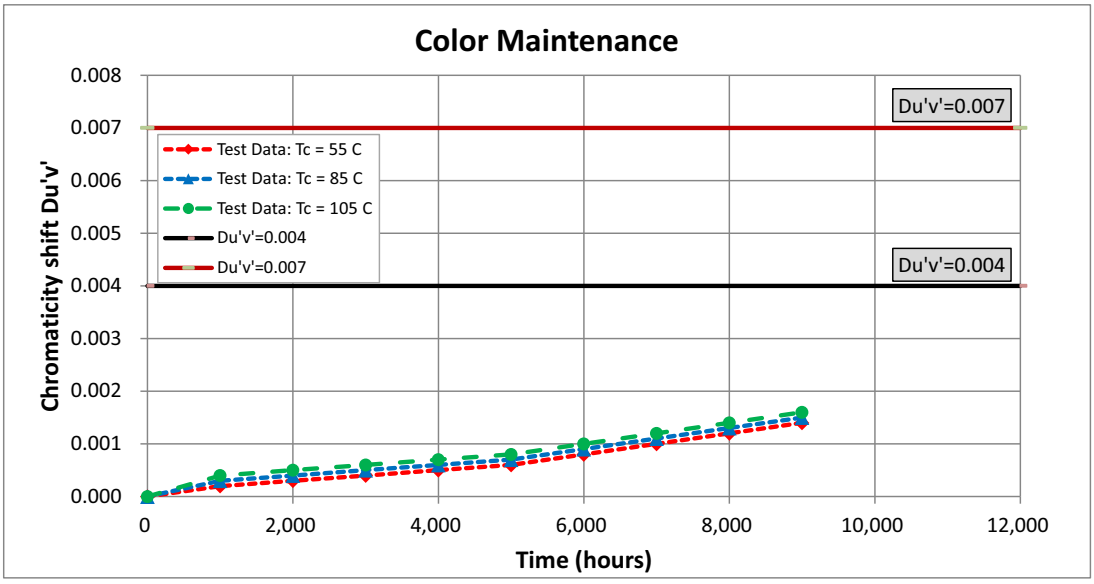

TMU140055CL8xxB

RoHS COMPLIANT

Mechanical Drawings

33.1”
[840mm]

Overall Dimensions	
Length	33.1” [840mm]
Width	1.73” [44mm]
Height	0.39” [10mm]

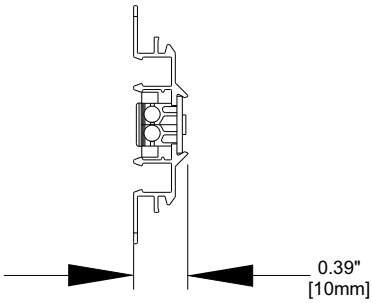

SIDE VIEW

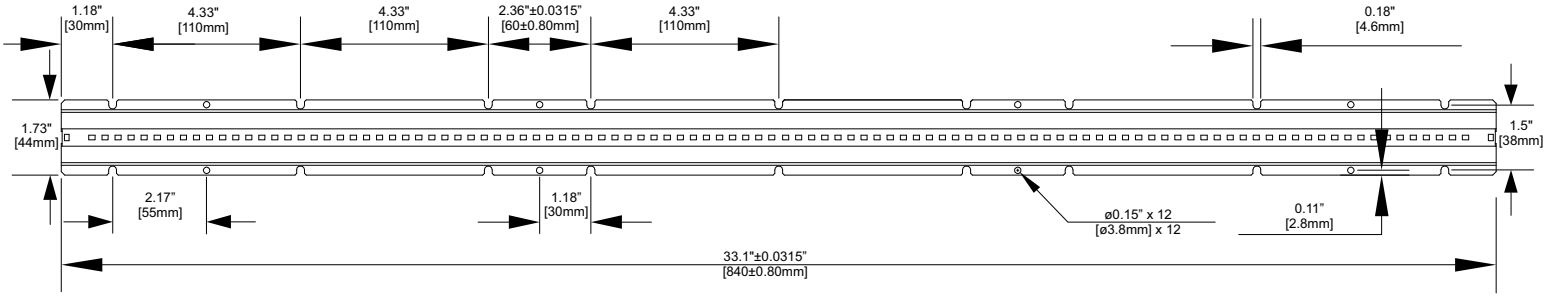

TOP VIEW

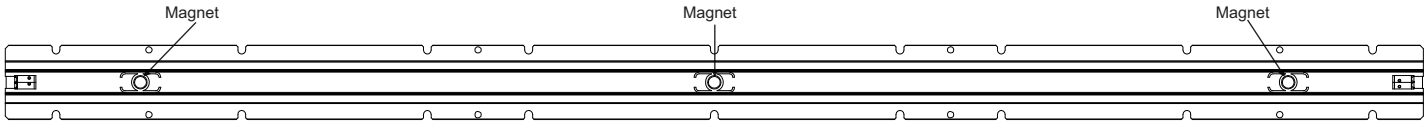

BOTTOM VIEW

Unmarked General Tolerance

<4” [100mm]:	±0.0138” [±0.35mm]
4”~11.8” [100~300mm]:	±0.0197” [±0.5mm]
>11.8” [300mm]:	±0.0236” [±0.6mm]
HOLES:	±0.002” [±0.05mm]

TMU140055CL8xxB

RoHS COMPLIANT

Accessories

33" Diffuser Lens

Fulham Part Number: **VLE-OPT-120-033D**

- White polycarbonate diffuser lens - 82% transmissivity at nominally rated currents.

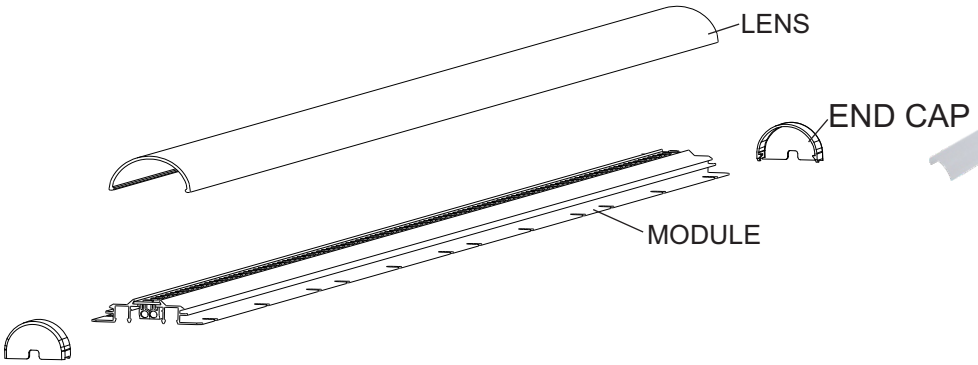

ISOMETRIC VIEW

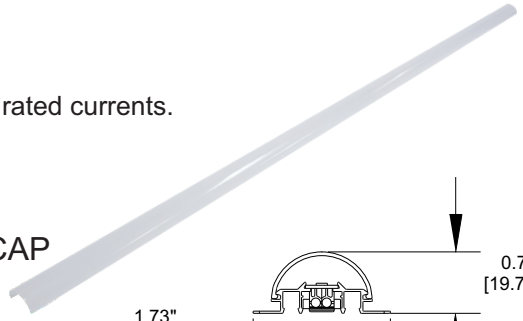

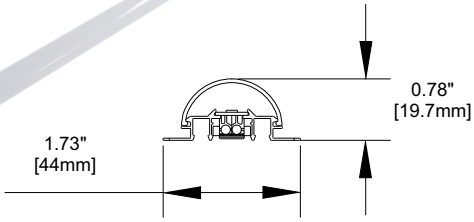

SIDE VIEW

Installation Steps when using clamps:

1. Place the LED Module on the luminaire surface.
2. Place the Diffuser lens on top of LED module (line it up with LED module mounting edges).
3. Push down to snap into place.

End Caps

Fulham Part Number: **TLE-OPT-120-020**

- White Polybutylene Terephthalate (PBT) end caps

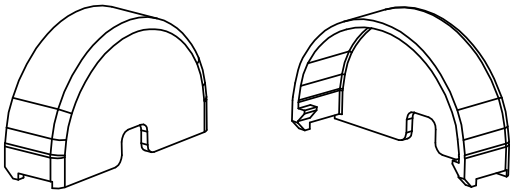

ISOMETRIC VIEW

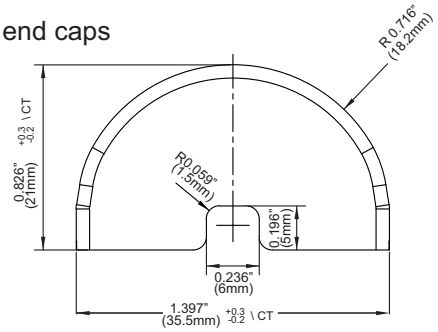

SIDE VIEW

Harness

TLC-HN02 (1 and 2 module connection)

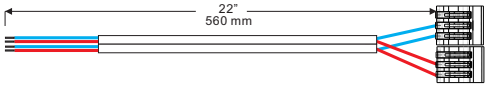

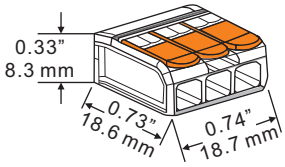

ISOMETRIC VIEW

TLC-HN04 (3 and 4 module connection)

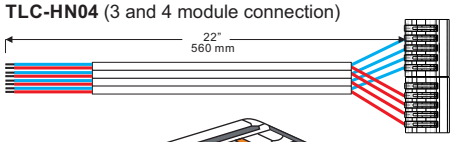

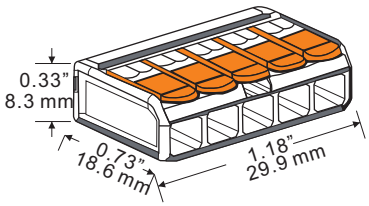

ISOMETRIC VIEW

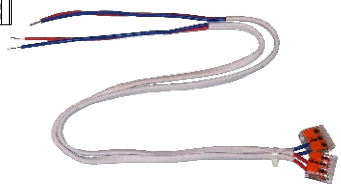

Interconnects

- Interconnect Type: WAGO Double pins to interconnect Modules (#2060-952/028-000)
- Approvals: cURus, UL 1977, and RoHS Compliant

NOTES:

1) Interconnects are NOT sold by Fulham.
2) Do not connect LinearHO Modules in parallel (end to end) if the current exceeds the maximum module rated current. This type of wiring would cause the pass-through current on the first module to exceed the rated current. This setup is in reference to wiring diagram #2 per Fulham's wiring diagram (see link on page #8). If the current is higher than the rated max, it is recommended to use wiring diagram #3.

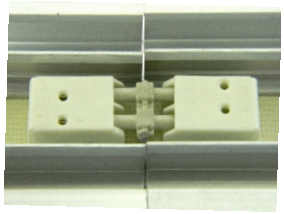

BOTTOM VIEW

TMU140055CL8xxB

RoHS COMPLIANT

Color and Binning

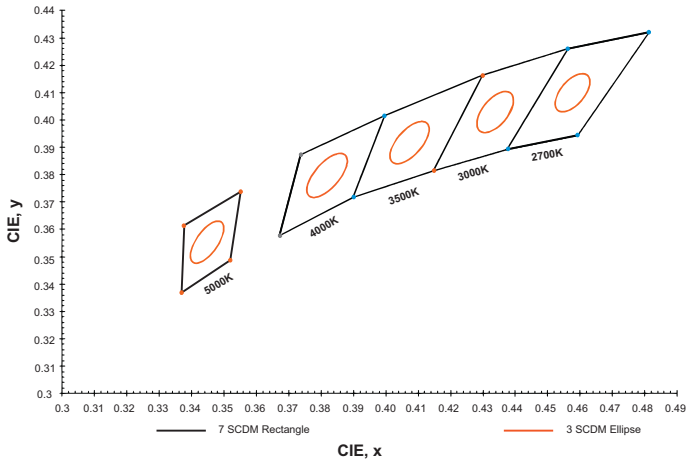

Optical Spectrum

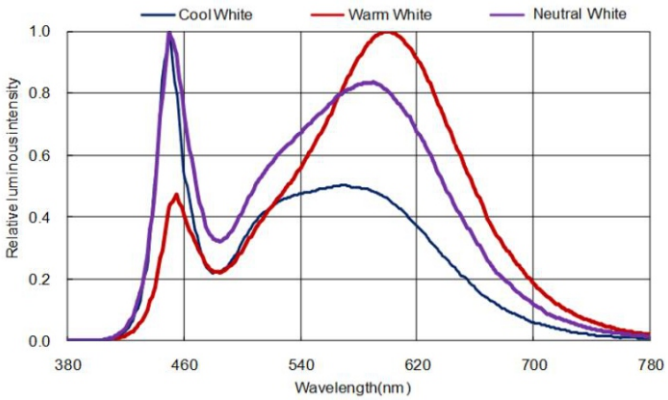

Compatible Fulham Drivers

(Please use the links below for a complete list of compatible Fulham drivers and wiring diagrams)

- LinearHO System Combination: https://www.fulham.com/PDFs/SpecSheets/TMU140055CL8xxA-2017-709-System-Combination.pdf
- Fulham's Wiring Diagrams: https://cdn.fulham.com/PDFs/SpecSheets/DC-Modules-Wiring-Diagrams.pdf
- Compatible with Fulham Hotspot EM Systems.

NOTES:

1) The Color and Binning and Optical Spectrum charts are for reference only. For more detailed info, contact factory.
2) Reference Seoul Chromaticity Diagram for Color and Binning. Binning per ANSI C78.377-2015 @ 25°C; 3 SDCM.
3) The Optical Spectrum values vary depending on product type and color rank.
4) Driver not included.
5) Do not connect LinearHO Modules in parallel (end to end) if the current exceeds the maximum module rated current. This type of wiring would cause the pass-through current on the first module to exceed the rated current. This setup is in reference to wiring diagram #2 per Fulham's wiring diagram (see the link above). If the current is higher than the rated max, it is recommended to use wiring diagram #3.

TMU140055CL8xxB

RoHS COMPLIANT

Guidelines

Termination Notes

- Connector Type: WAGO #744-392 (2 pin push wire connector)
  - AWG: 20...16 solid wire
  - Strip length: 8...9mm / 0.31...0.35in
  - Connector Max amp. rating: 6 Amps.

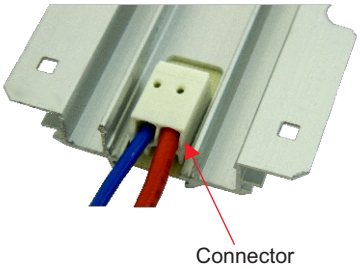

Fastening Notes

- If fastening by screw hole, use any screw with diameter less than 0.185 in (4.7mm). Use all available screw holes to ensure good contact between back side of module and mounting surface. Refer to max specified torque for installation. Suggested screw sizes: #6 or M4 Pan Head screw.

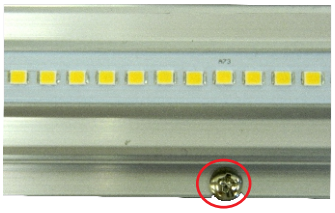

- If fastening using double-sided tape, start with clean, oil-free and dust-free surface. Peel backing and place LED module on mounting surface. Firmly press down on the module to ensure good adherence. Follow the double-side tape manufacturer's installation instructions.

- BJB P2F (Push-to-Fix) fixing elements for PCBs can be used to fasten LED modules to mounting surface. Reference BJB's website for ordering information and specific model to use: http://www.bjb.com/index.php?pid=376706&lid=10.

Environmental Rating / Conformal Coating

- The DC LinearHO Modules have been evaluated for use in dry or damp locations only. If used in wet locations, acceptability and the need for additional evaluation shall be determined in the end product.

- Fulham's LinearHO modules are available with conformal coating; made to order with MOQ and lead time will apply. The conformal coating is a silicone based material which is double sprayed on the module only (LEDs and PCB). Conformal coating is recommended for the following applications: near ocean where salt is present, constant moisture, refrigeration, continuously high humidity, or outdoor applications. An IP rating of IP64 or IP65 is achieved when the conformal coating is used, but other factors should be considered. Fulham still recommends the luminaire also meet an IP64/65 rating.

Electrostatic Sensitive Product (ESD)

- Fulham LED products should be handled with proper measures to protect against any potential ESD damage.

- When servicing, personnel should be ground and direct contact with LED should be avoided.

Thermal Management

- Proper thermal management should be employed to ensure life and reliability of product. Max Tc of module should not be exceeded.

- Use of thermal grease, paste, pad, or other material interface is highly recommended.

Polarity Notes

- DC Modules are polarity sensitive.

- Ensure that "positive" from LED Driver is connected to "positive" of LED modules and that "negative" from LED Driver is connected to "negative" of LED modules.

- Polarities of modules are marked with "+" for positive and "-" for negative.

TMU140055CL8xxB

RoHS COMPLIANT

Part Number Matrix

T	M	U	140	055	C	L	8	50	B

Type	Control Type	Input Current	Max. Power	Material	Shape	CRI	Color Temperature	Option
M = Module (UL Class 2)	U = None	140 = 1400mA Max.	055 = 55W	C = CEM3 + Conn	L=Linear	8 = 80 9 = 90	**27** = 2700K **30** = 3000K **35** = 3500K **40** = 4000K **50** = 5000K **57** = 5700K **65** = 6500K	**B =** Standard ④ **E =** Conformal Coating (MTO)

④See page #9 for Conformal Coating information. Made to order (MTO).
All CCT and CRI options are made to order with MOQ (minimum order quantities) and lead times.

Product Image: LinearHO Module

Not actual Module. For reference only

TOP VIEW

Packaging

Master Carton

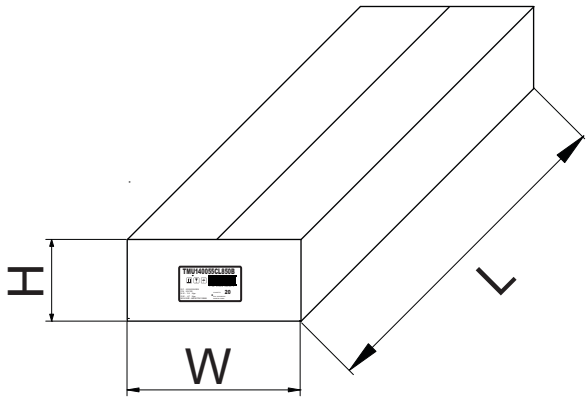

OUTER DIMENSION		
L	W	H
34.65”(880mm)	10.63”(270mm)	4.33”(110mm)

Net Weight	Gross Weight	QUANTITY
7.6 lbs. (3.45kg)	10.22 lbs. (4.6kg)	20pc.