FULHAM THOROLED

Discontinued

Contact Fulham for availability. Not for use in new designs.

TKMUNV011RTXXX6
TET120013RTXXX6, TKT120013RTXXX6,
TEMUNV013RTXXX6, TKMUNV013RTXXX6,

ENERGY STAR · CLASSIFIED c UL us · c UL us · RoHS COMPLIANT

120VAC / Universal Input Rectangular LED DC Engines and LED DC Engine Retrofit Kits

- High Density, high brightness chip array
- Suitable for open or fully enclosed luminaires
- Suitable for luminaires with plastic and glass lenses
- Constant Current module design for maximum efficacy
- 120VAC dedicated or UNV options
- TRIAC/ELV or 0-10V Dimmable
- Class 2 Lighting System
- UL Recognized (DC Engine option)
- UL Classified (DC Engine Retrofit Kit option)
- Energy Star Luminaire 2.0 Certified Subcomponent Database (CSD) (for rebate programs)*
- Energy Star Luminaire 2.0 Listed (for rebate programs)*

General Specifications

Input Voltage ①	TET/TKT: 120V;50/60 Hz	TEM/TKM: 120~277V;50/60Hz
Input Current ①	11RT = 0.092A Max @120VAC	13RT = 0.11A Max @120VAC
	11RT = 0.04A Max @277VAC	13RT = 0.05A Max @277VAC
Input Power ①	11RT = 9.54W	13RT = 12.3W
Energy Star Input Power (Measured)	11RT = 9.5W (ES Lum. V2.0)	13RT = 12W (ES CSD)
Input PF	>.98	
THD	<20%	
Module Operating Voltage	11RT: 24.8V	13RT: 31V
Max Lumen Output @ Full Power ①	11RT = 1155 lumens; 13RT = 1445 lumens @ 4000K / 80CRI / 25°C	
Dimming Type / Range	Leading Edge (TRIAC) or Trailing Edge (ELV) or 0-10V / 100% ~ 10%	
Beam Angle	120°	
CRI	80, 90	
Storage Temperature Range	-35°C to 100°C / -31°F to 212°F	
Operating Ambient Temperature Range (Ta)	Engine: -35 to +50°C / -31 to +122ºF; Kit: -35 to +45°C / -31 to +113ºF	
Maximum Driver Case Temperature (Tc)	TET/TKT: 88°C TEM/TKM: 90°C	
Maximum Module Case Temperature (Tc)	L70: Tc max=85ºC (Ts=90°C) / L90: Tc max=85ºC (Ts=90°C)	
Estimated Lumen Maintenance	L70: >60,000Hrs / L90: 40,000Hrs	
Color Consistency	Binning per ANSI C78.377-2011 @ 25°C; 7 SDCM	
Overall Size	4.1” x 7.4” x 0.945”H	
Weight	TET/TKT: 190g	TEM/TKM: 200g
Driver Part Number	TET/TKT: T1T11200350-15L	TEM/TKM: T1M1UNV0350-15L
DC Module Part Number	11RT: TM32RT05XX-2X6	13RT: TM40RT05XX-2X6
Maximum Screw Installation Torque	35 inch - ounces	
Safety/Compliance	DC Engines: cURus (File # E351548: PTL136X20www②; Driver File # E342838)	
	DC Engines Retrofit Kits: cULus File # E365124	
	Energy Star Luminaire 2.0 Certified Subcomponent Database (CSD)*	
	Energy Star Luminaire 2.0 Listed*	
	Class 2 Lighting System	
	RoHS Compliant	
RFI/EMI	TET/TKT: FCC Part 15B Consumer,	
	TEM/TKM:FCC Part 15B Consumer, EN55015	
Sound Rating / Noise	A / <24 dBA	
Thermal Feedback	No	
Service Life	50,000hrs @ Ta <= 45°C (Tc mod <=85°C; Tc driver <= 75°C)	
Warranty	5 years @ Max. Tc from the date of manufacture	

★ See page #4 “Certification Chart” for exact models.
① Measured electrical data per UL file
② www = PCB Rev #

FULHAM THOROLED

Discontinued

Contact Fulham for availability. Not for use in new designs.

TKMUNV011RTXXX6
TET120013RTXXX6, TKT120013RTXXX6,
TEMUNV013RTXXX6, TKMUNV013RTXXX6,

ENERGY STAR · CLASSIFIED UL US · UL US · RoHS COMPLIANT

Part Numbering Matrix

T E T 120 011 RT 40 - 0 6

Compliance	⑤Control	Engine Input Voltage	Engine Input Power	Color Temperature	Configuration
E = LED DC Engines (UL Recognize)	③ **T** = TRIAC/ELV	③ **120** = 120VAC	⑥ **011** = 11W	**27** = 2700K	③ **0** = 80 CRI
④ **K** = DC Engine Retrofit Kit (UL Classified)	③ **M** = 0-10V	③ **UNV** = 120~277VAC	③ **013** = 13W	③ **30** = 3000K	**1** = 90 CRI
				35 = 3500K	**2** = 80 CRI + Conf Coat
				③ **40** = 4000K	**3** = 90 CRI + Conf Coat
				50 = 5000K	

Electrical and Optical Specifications

Color Temperature	Part Number	Input Power	Nominal Luminous Flux @ 90 CRI	Nominal Luminous Flux @ 80 CRI	Efficacy @ 80 CRI
3000K	TKMUNV011RT30x6	9.5W	860 lumens	1075 lumens	113 lm/W
	TET120013RT30x6 TKT120013RT30x6 TEMUNV013RT30x6 TKMUNV013RT30x6	12W	1076 lumens	1345 lumens	112 lm/W
4000K	TKMUNV011RT40x6	9.5W	924 lumens	1155 lumens	121 lm/W
	TET120013RT40x6 TKT120013RT40x6 TEMUNV013RT40x6 TKMUNV013RT40x6	12W	1156 lumens	1445 lumens	120 lm/W

Luminous Flux De-Rating: CCT and CRI Multipliers

	2700K	3000K	3500K	4000K	5000K
CRI 80(R9> 0)	0.92	0.96	0.98	1.00	1.09
CRI 90(R9>50)	0.74	0.75	0.76	0.78	0.83

NOTES:

1) Performance based on Tc mod = 25°C. See thermal de-rating chart (pg. 3) for higher temperature operation.
2) Electrical and optical specifications are based on a 2700K model and at Energy Star elevated case temperature (13W, CSD) or at 25C (11W, Lum. V2.0).
3) Nominal luminous flux at 90 CRI are calculated values, not measured.
4) Refer to Energy Star CSD (13W) or Luminaires 2.0 (11W) for actual measurements on specific part numbers.
5) Performance for these components have been tested in accordance with Energy Star.
6) Nominal lumen output and efficacy is calculated for standard options. Reference CCT & CRI vs Luminous Flux chart for lumen ratio calculation.
7) Specifications are subject to change without notice.

③Standard Product offering (All other options are made to order with MOQ and lead time)
④LED Engine Retrofit Kit includes mounting hardware, retrofit labels, and installation instructions.
⑤TET/TKT: TRIAC/ELV Dimmable available only in 120VAC Input, TEM/TKM: 0-10V Dimmable available only in Universal Input.
⑥11W available only in UNV DC Retrofit Kit (TKMUNV).

Discontinued
Contact Fulham for availability. Not for use in new designs.

TKMUNV011RTXXX6
TET120013RTXXX6, TKT120013RTXXX6,
TEMUNV013RTXXX6, TKMUNV013RTXXX6,

RoHS COMPLIANT

Thermal Specifications

	LED Engine	[7] LED Engine Retrofit Kit
Storage Temperature Range	-35°C to 100°C / -31°F to 212°F	-35°C to 100°C / -31°F to 212°F
Operating Ambient Temperature Range	-35°C to 50°C / -31°F to 122°F	-35°C to 45°C / -31°F to 113°F
Maximum Driver Case Temperature (Tc)	88°C / 190.4°F	90°C / 194°F
Maximum Module Case Temperature (Tc)	L70: 85°C / 185°F; L90: 85°C / 185°F	L70: 85°C / 185°F; L90: 85°C / 185°F

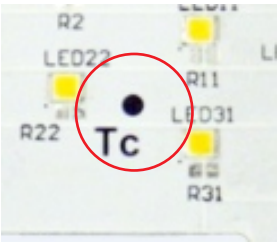

Tc located on module

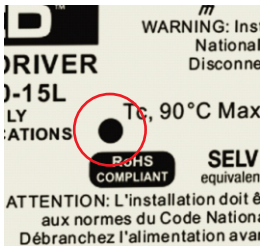

Tc located on driver

Thermal De-Rating: Tc vs. Luminous Flux vs. Total Vf Multiplier

Module Case Temperature (Tc)	Luminous Flux Multiplier	Total Vf Multiplier
25ºC	1.000	1.000
30ºC	0.995	0.997
35ºC	0.989	0.993
40ºC	0.984	0.990
45ºC	0.978	0.986
50ºC	0.973	0.983
55ºC	0.964	0.979
60ºC	0.959	0.976
65ºC	0.951	0.976
70ºC	0.942	0.972
75ºC	0.937	0.969
80ºC	0.929	0.965
85ºC	0.921	0.962
90ºC	0.910	0.958
95ºC	0.901	0.958
100ºC	0.890	0.955

NOTES:

1) Refer to LED Engine Retrofit Kit Installation Instructions for further detail.
2) This LED Engine Kit can retrofit any luminaire with a length/height greater or equal to the minimum dimensions shown on the Installation Instructions.
3) This LED Engine Kit can be used with luminaires similar to the one illustrated on the Installation Instructions.

[7] Suitable for wall sconce luminaire with minimum dimensions: 3.75” width with a height of 11.75”.

Discontinued

Contact Fulham for availability. Not for use in new designs.

TKMUNV011RTXXX6
TET120013RTXXX6, TKT120013RTXXX6,
TEMUNV013RTXXX6, TKMUNV013RTXXX6,

Certification Chart

Model / Classification	TKMUNV011RTxxx6 TxMUNV013RTxxx6 TxT120013RTxxx6
RoHS COMPLIANT	YES
c UL us	YES
c UL us	TKMUNV011RTxxx6 TKxxxx013RTxxx6
ENERGY STAR Listed	TKMUNV011RTxx06 TxMUNV013RTxx06
ENERGY STAR CSD	TKMUNV011RTxx06 TxMUNV013RTxx06 TxT120013RTxx06
Class 2 Lighting System	YES

Energy Star™ TM-21 Calculator Data

Tc Module	Reported L70	Reported L90
55°C	>60,000 Hrs	>60,000 Hrs
85°C	>60,000 Hrs	40,000 Hrs
100°C	>60,000 Hrs	24,000 Hrs

Tc Module	Calculated L70	Calculated L90
55°C	345,000 Hrs	96,000 Hrs
85°C	166,000 Hrs	40,000 Hrs
100°C	109,000 Hrs	24,000 Hrs

Product Image: Rectangular DC Engine Kit

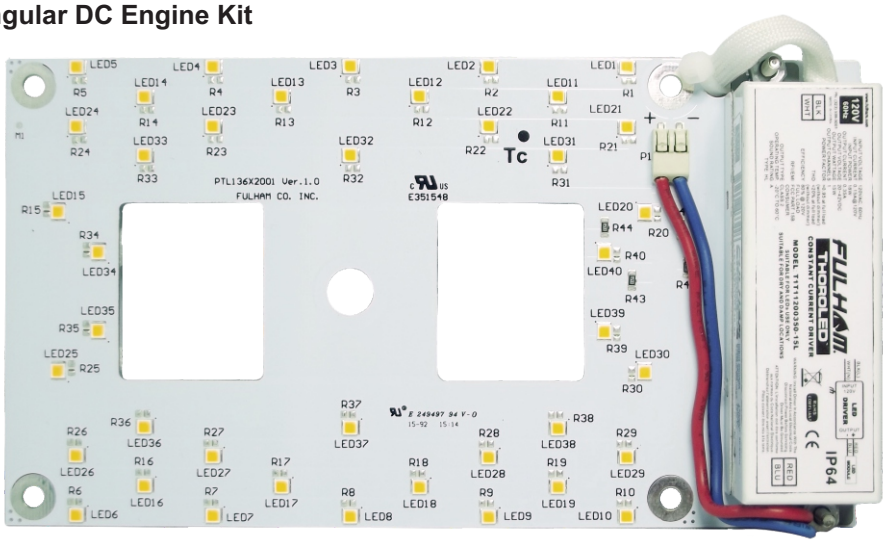

CAUTION: THIS LUMINAIRE HAS BEEN MODIFIED TO OPERATE LED LAMPS. DO NOT ATTEMPT TO INSTALL OR OPERATE FLUORESCENT LAMPS IN THIS LUMINAIRE.	Model: TKxxxx01xRTxx-06 Information. Replace only with: DRIVER MODEL #: T1x11200350-15L LED MODULE #: TMxxRT0xxx-2x6

LED Engine Retrofit Kit
only: Hardware and Labels

NOTES:

1) Energy Star CSD:
https://www.energystar.gov/products/lighting_fans/certified_lighting_subcomponent_database_csd

2) Energy Star Listed:
https://www.energystar.gov/productfinder/product/certified-light-fixtures/results?scrollTo=342&search_text=fulham&fixture_type_isopen=&markets_filter=United+States&zip_code_filter=&product_types=Select+a+Product+Category&sort_by=light_output_lumens&sort_direction=asc&page_number=0&lastpage=0

Discontinued

Contact Fulham for availability. Not for use in new designs.

TKMUNV011RTXXX6
TET120013RTXXX6, TKT120013RTXXX6,
TEMUNV013RTXXX6, TKMUNV013RTXXX6,

RoHS COMPLIANT

Mechanical Drawings

TOP VIEW

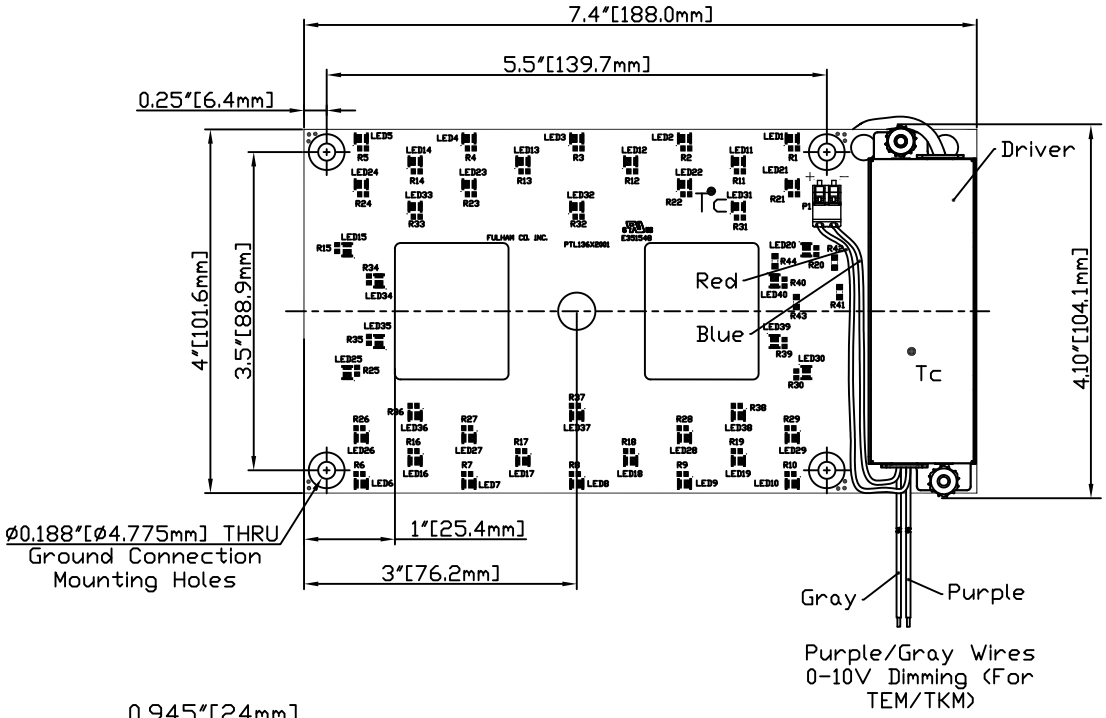

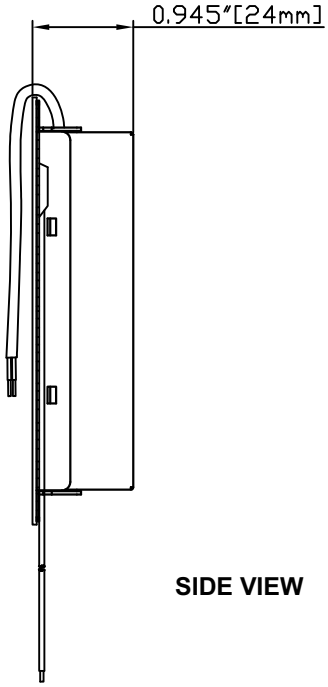

SIDE VIEW

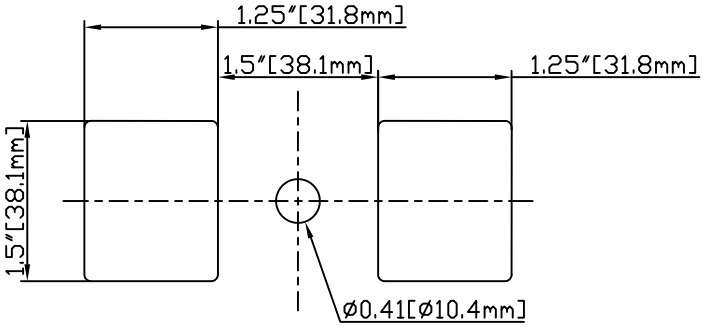

PARTIAL VIEW

Wire Length - Inches

AC Input - Black / White	12
0-10V Dimming - Purple (10V+) / Gray (10V-)	12

TKMUNV011RTXXX6
TET120013RTXXX6, TKT120013RTXXX6,
TEMUNV013RTXXX6, TKMUNV013RTXXX6,

ENERGY STAR · CLASSIFIED c UL us · c RL us · RoHS COMPLIANT

Guidelines

Termination Notes

- If connectors are used, use solid wire size 24 – 18 AWG, rated at a minimum 50V, minimum 105°C, and stripped to length between 6-7 mm (0.24-0.28 inches).
- Push button for insertion of conductor and for easy removal of wires.
- Connector not for multiple use

Push Button

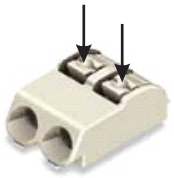

Fastening Notes

- If fastening by screw hole, use any screw with diameter less than 0.185 in (4.7mm). Use all available screw holes to ensure good contact between back side of module and mounting surface. Refer to max specified torque for installation. Suggested screw sizes: #6 or M4 Pan Head screw.
- If fastening using double-sided tape, start with clean, dust-free surface. Peel backing and place LED module on mounting surface. Firmly press down on the module to ensure good adherence. Follow the double-side tape manufacturer's installation instructions.

Environmental Rating

- LED DC Engines Modules are rated for dry locations, unless option for conformal coating is requested.
- Conformal coating is Acrylic/RTV based and rated for Environment and Moisture Protection per IPC-CC-830.

Electrostatic Sensitive Product (ESD)

- Fulham LED products should be handled with proper measures to protect against any potential ESD damage.
- When servicing, personnel should be ground and direct contact with LED should be avoided.

Thermal Management

- Proper thermal management should be employed to ensure life and reliability of product.
- Use of thermal grease, paste, pad, or other material interface is highly recommended.

Polarity Notes

- LED Modules are polarity sensitive.
- Ensure that "positive" from LED Driver is connected to "positive" of LED modules and that "negative" from LED Driver is connected to "negative" of LED modules.
- Polarities of LED modules are marked with "+" for positive and "-" for negative.

Discontinued

Contact Fulham for availability. Not for use in new designs.

TKMUNV011RTXXX6
TET120013RTXXX6, TKT120013RTXXX6,
TEMUNV013RTXXX6, TKMUNV013RTXXX6,

RoHS COMPLIANT

Color and Binning

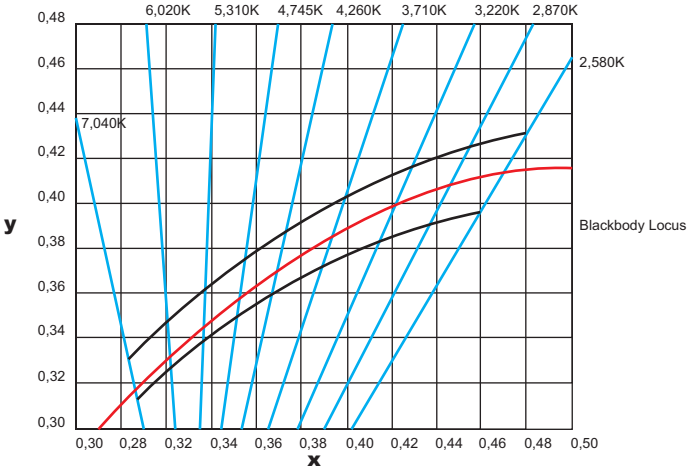

Optical Spectrum

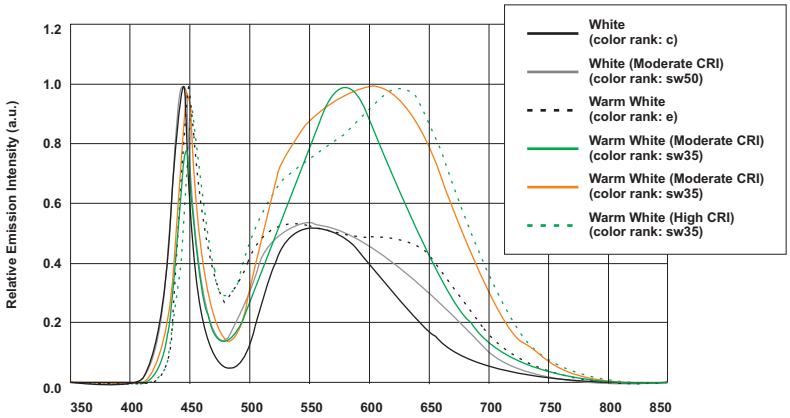

NOTES:

1) The Color and Binning and Optical Spectrum charts are for reference only. For more detailed info, contact factory.
2) Reference Nichia Chromaticity Diagram for Color and Binning. Binning per ANSI C78.377-2011 @ 25°C; 7 SDCM.
3) The Optical Spectrum values vary depending on product type and color rank.
4) Driver included.

Discontinued

Contact Fulham for availability. Not for use in new designs.

TKMUNV011RTXXX6
TET120013RTXXX6, TKT120013RTXXX6,
TEMUNV013RTXXX6, TKMUNV013RTXXX6,

RoHS COMPLIANT

Compatible Tested Dimmers

(Contact Fulham for other alternatives)

T1T11200350-15L (TRIAC or ELV Dimmers): TET / TKT Models

Manufacture	Model	Type
Leviton	IPI06-1LM	TRIAC (Leading Edge)
Leviton	VPI06-1LT	TRIAC (Leading Edge)
Lutron	DV-600P	TRIAC (Leading Edge)
Lutron	MAW-600H	TRIAC (Leading Edge)
Lutron	S-603PR	TRIAC (Leading Edge)
Lutron	DV603PG	TRIAC (Leading Edge)
Lutron	LG-603P	TRIAC (Leading Edge)
Lutron	LG-600P	TRIAC (Leading Edge)
Levinton	6631-L	TRIAC (Leading Edge)
Levinton	6681	TRIAC (Leading Edge)
Lutron	S-600P	TRIAC (Leading Edge)
Lutron	TG-600P	TRIAC (Leading Edge)
Levinton	IPI10	TRIAC (Leading Edge)

NOTES:

1) Driver included.

Discontinued

Contact Fulham for availability. Not for use in new designs.

TKMUNV011RTXXX6
TET120013RTXXX6, TKT120013RTXXX6,
TEMUNV013RTXXX6, TKMUNV013RTXXX6,

RoHS COMPLIANT

DC Engine Equivalency Chart

DC Engine/Kit (4" x 7" Rectangular)				CFL					
DC Engine/Kit Part Number	System Wattage	Lumen Output	Efficacy	CFL Style	Lamp Wattage	# of Lamps	Total Wattage	Lumen Output	Efficacy
TKMUNV011RTxx06	9.5W	1245 lm (4K/80CRI)	131 lm/W	Quad	13W	1	13W	775 lm	59 lm/W
					18W	1	18W	1075 lm	
				Triple	13W	1	13W	825 lm	63 lm/W
					18W	1	18W	1020 lm	56 lm/W
TET120013RTxx06	12W	1415 lm (4K/80CRI)	117 lm/W	Quad	13W	2	26W	1550 lm	59 lm/W
					26W	1	26W		
TKT120013RTxx06				Triple	13W	2	26W	1650 lm	63 lm/W
					26W	1	26W	1536 lm	59 lm/W
TEMUNV013RTxx06				Circline T5	22W	1	22W	1530 lm	69 lm/W
TKMUNV013RTxx06				Circline T9	22W	1	22W	775 lm	35 lm/W

NOTES:

1) For reference only, several factors apply.
2) Emergency systems are not UL classified for field installation.

Discontinued

Contact Fulham for availability. Not for use in new designs.

TKMUNV011RTXXX6
TET120013RTXXX6, TKT120013RTXXX6,
TEMUNV013RTXXX6, TKMUNV013RTXXX6,

RoHS COMPLIANT

DC ENGINES/KITS WITH EMERGENCY OPTIONS

DC Engine/Kit Part Number	Emer. Driver Part Number	Wattage	Battery Part Number	Harness (mA)	Total Vf (V)	Total Power (W)	Total Lum. Output (lm)	Eff. (lm/W)
TKMUNV011RT4006	FHS2-UNV-36L	4W	FHSBATT8-AA9 FHSBATL3-1	FHS-HARNESS-150	23.8	3.6	540	151
		6W	FHSBATL6-.6	FHS-HARNESS-150	29.7	4.5	675	151
		8W	FHSBATL3-1.5 FHSBATL3-1.5S	FHS-HARNESS-300	24.6	7.4	1000	136
TET120013RT4006	FHS2-UNV-36L	4W	FHSBATT8-AA9 FHSBATL3-1	FHS-HARNESS-100	29.3	2.9	455	156
TKT120013RT4006								
TEMUNV013RT4006		6W	FHSBATL6-.6	FHS-HARNESS-150	29.7	4.5	675	151
TKMUNV013RT4006		8W	FHSBATL3-1.5 FHSBATL3-1.5S	FHS-HARNESS-250	30.3	7.6	1070	141

NOTES:

1) For reference only, several factors apply.
2) Emergency systems are not UL classified for field installation.

Discontinued

Contact Fulham for availability. Not for use in new designs.

TKMUNV011RTXXX6
TET120013RTXXX6, TKT120013RTXXX6,
TEMUNV013RTXXX6, TKMUNV013RTXXX6,

RoHS COMPLIANT

Wiring Diagram: with Emergency System

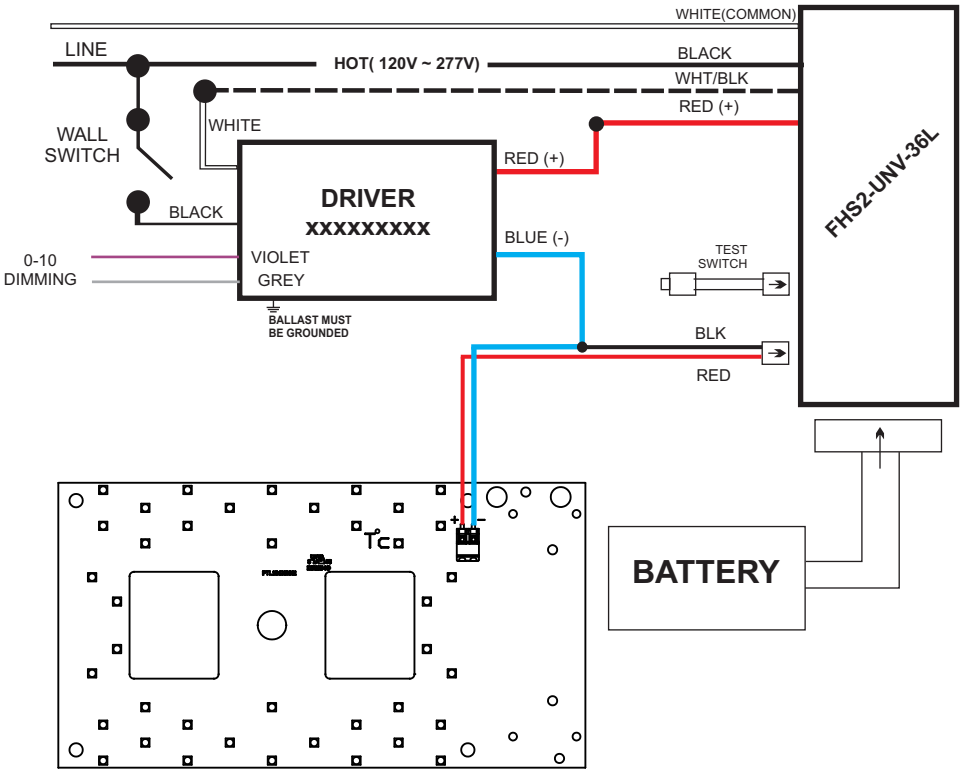

NOTES:

1) For illustration purposes, LED driver is shown separate from LED module.