FHEM16RH

Micro Adjustable LED Square-Head Remote Lamps

- 12 LED assembly for use in areas requiring remote lighting
- Energy saving LED
- For indoor and outdoor applications
- High impact resistant thermoplastic housing
- Single and double remote lamps
- Each lamp head is used as part of an emergency lighting system
- Compatible with FHEM16, FHEX20, FHEC33 and FHEC35 series ①
- Each lamp head is fully adjustable and glare-free
- Recommended Max Mounting Distance <20ft using 18 gauge wire *

General Specifications

	FHEM16RH13V1	FHEM16RH13V2
Input Power	0.92W	1.84W
Input Voltage	3.6V	3.6V
Number of Heads	1	2
Overall Size	FHEM16RH13V1: 5.5” L x 4.4” H x 3.4” W	
	FHEM16RH13V2: 7.8” L x 4.4” H x 3.2” W	
Emergency Operation	90 minutes	
Compliance	UL 924 Listed	
	Damp Location	
Warranty	5 years from the date of manufacture	

Mechanical Data

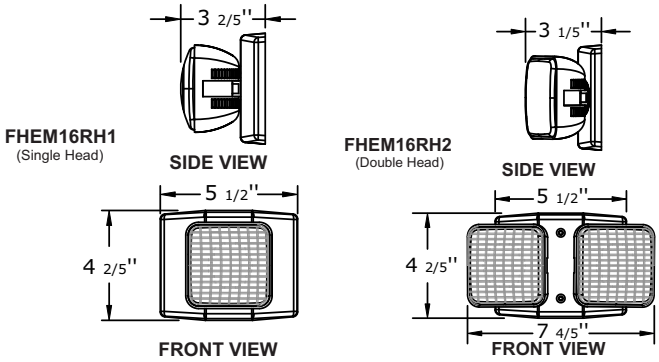

Lamp Data

- FHEM16RH13V1 - 3.6V, 0.92W Square LED Lamp Heads
- FHEM16RH13V2 - 3.6V, 1.84W Square LED Lamp Heads

Part Number Matrix

FH	EM	16	RH	1	3V	1
FireHorse	Emergency Luminaire	Model Number	RH=Remote Head	Number of Heads 1 = 1 Head 2 = 2 Heads	Voltage 3V = 3.6Volts	Wattage Per Head 1 = 0.92W

① Compatible Series are UL Listed with Remote Heads

* If you exceed the recommended wiring distance noticeable lumen loss will occur

Fulham Co. Inc.: 12705 South Van Ness Ave., Hawthorne, CA 90250 Tel.: 1-323-779-2980 Fax.: 1-323-754-9060. order@fulham.com www.fulham.com
Specifications subject to change without notice.