SUNHORSE FULHAM

WORKHORSE FULHAM · RACEHORSE FULHAM · SUGAR CUBE FULHAM

LightTech LightSources

FULHAM ELECTRONIC BALLASTS FOR UV & GERMICIDAL APPLICATIONS

provide a low-maintenance, energy-efficient solution for germicidal ultraviolet lighting applications, including water purification, air purification and surface disinfection.

ESSENTIAL ESSENTIAL

Advantages of Fulham SunHorse™ Ballasts:

- Multi-lamp operation: Up to 6 lamps can be run off one ballast
- Dimming and non-dimming options are available
- The extended lamp life that these ballasts promote lowers maintenance costs
- Compatible with a wide range of lamp types and configurations

SUNHORSE FULHAM

FOR UV & GERMICIDAL APPLICATIONS

COMMON SPECIFICATIONS

Frequency	50/60Hz
Protection Output	Yes
Protection Input	Fuse / MOV
Over Current	Yes
Transient Protection	C62,41 Class A7 Strikes **EMI** FCC Part 18 non-consumer
Regulatory Approvals	UL/cULus as indicated Below
Class P Inherent	Type 1 Outdoor
Thermal Protection	-
Sound Rating	"A"

Models	Operating Voltage	Output Current for Program Start models	Rated Max. Load	Min. Operating Temp.	Max Case Temp.	Ballast Dimensions	Certifications
SunHorse Ballast							
SHS1-UNV-C-I *	120-277VAC	425mA	42W	0ºF (32ºC)	75ºF (70ºC)	L 5.05", W 2.36", H 1.00"	cULus
SHS5-024-C	24VAC	425mA	42W	0ºF (32ºC)	158ºF (70ºC)	L 3.64", W 3.12", H 1.01"	cULus
SHS2-MLT-L	120-240VAC	425mA	41W	0ºF (32ºC)	158ºF (70ºC)	L 5.87", W 1.50", H 1.04"	cULus
SHS3-MLT-L	120-240VAC	800mA	41W	-10ºF (-14ºC)	158ºF (70ºC)	L 5.87", W 1.50", H 1.04"	cULus
SHS10-UNV-H *	120-277VAC	1000mA	150W	0ºF (32ºC)	158ºF (70ºC)	L 10", W 2.6", H 1.26"	cULus
SHS11-UNV-H *	120-277VAC	800mA	190W	0ºF (32ºC)	158ºF (70ºC)	L 10", W 2.6", H 1.26"	cULus
SHS14-UNV-H *	120-277VAC	425mA	150W	0ºF (32ºC)	158ºF (70ºC)	L 10", W 2.6", H 1.26"	cULus
SHS15-UNV-H *	120-277VAC	800mA	310W	0ºF (32ºC)	158ºF (70ºC)	L 10", W 2.6", H 1.26"	cULus
FEP-120-600-L	120VAC	N/A	320W	-18ºF (-0ºC)	158ºF (70ºC)	L 19.25", W 3", H 1.25"	cULus
FEP-210-600-L	210VAC	N/A	320W	0ºF (32ºC)	158ºF (70ºC)	L 19.25", W 3", H 1.25"	cULus
FEP-230-600-L	230VAC	N/A	320W	-18ºF (-0ºC)	158ºF (70ºC)	L 19.25", W 3", H 1.25"	cULus
SHGS1 MID 2 200 L	208-240VAC	N/A	380W	0ºF (32ºC)	158ºF (70ºC)	L 12", W 3.11", H 1.73"	cULus

Dimmable

DIMMING FEATURES

OPTIONS AVAILABLE **Instant Start with 0-10V dimming control and linear (smooth) dimming from 100-70%.**

SHD21-230-L-I *	230VAC	320W	0ºF (32ºC)	158ºF (70ºC)	L 16.69", W 1.72", H 1.18"	cULus

*These models feature an indicator for lamp operation.

Models	Operating Voltage	Rated Max. Load	Min. Operating Temp.	Max Case Temp.	Ballast Dimensions	Certifications
WorkHorse Ballast						
WH1-120-L	120VAC	28W	0ºF (-18ºC)	158ºF (70ºC)	L 6”, W 1”, H .75”	UL
WH2-120-L	120VAC	35W	0ºF (-18ºC)	158ºF (70ºC)	L 5.5”, W 1”, H 1”	UL
WH2-120-C	120VAC	35W	0ºF (-18ºC)	158ºF (70ºC)	L 3.3”, W 1.75”, H 1”	UL
WH2-230-L	230VAC	35W	0ºF (-18ºC)	158ºF (70ºC)	L 5.5”, W 1”, H 1”	UL
WH2-277-L	277VAC	35W	0ºF (-18ºC)	158ºF (70ºC)	L 5.5”, W 1”, H 1”	UL
WH2-277-C	277VAC	35W	0ºF (-18ºC)	158ºF (70ºC)	L 3.3”, W 2.3”, H 1”	UL
WH3-120-L	120VAC	34W	0ºF (-18ºC)	158ºF (70ºC)	L 6.5”, W 1.5”, H 1”	UL
WH3-120-C	120VAC	64W	0ºF (-18ºC)	158ºF (70ºC)	L 3.8”, W 2.5”, H 1”	UL
WH3-230-L	230VAC	64W	0ºF (-18ºC)	158ºF (70ºC)	L 6.5”, W 1.5”, H 1”	UL
WH3-277-L	277VAC	64W	0ºF (-18ºC)	158ºF (70ºC)	L 6.5”, W 1.5”, H 1”	UL
WH3-277-C	277VAC	64W	0ºF (-18ºC)	158ºF (70ºC)	L 3.8”, W 3.1”, H 1”	UL
WH4-120-L	120VAC	70W	0ºF (-18ºC)	158ºF (70ºC)	L 6.5”, W 1.5”, H 1”	UL
WH5-120-L	120VAC	128W	0ºF (-18ºC)	158ºF (70ºC)	L 8.5”, W 1.72”, H 1”	UL
WH5-230-L	230VAC	128W	0ºF (-18ºC)	158ºF (70ºC)	L 9.5”, W 1.72”, H 1”	UL
WH5-277-L	277VAC	128W	0ºF (-18ºC)	158ºF (70ºC)	L 9.5”, W 1.72”, H 1”	UL
WH6-120-L	120VAC	128W	0ºF (-18ºC)	158ºF (70ºC)	L 8.5”, W 1.72”, H 1”	UL
WH6-277-L	277VAC	140W	0ºF (-18ºC)	158ºF (70ºC	L 9.5”, W 1.72”, H 1”	UL

Models	Operating Voltage	Rated Max. Load	Min. Operating Temp.	Max Case Temp.	Ballast Dimensions	Certifications
WorkHorse Ballast						
WH7-120-L	120VAC	220W	0ºF (-18ºC)	158ºF (70ºC	L 19.25”, W 1.72”, H 1”	UL
WH7-120-H	120VAC	220W	0ºF (-18ºC)	158ºF (70ºC	L 11.75”, W 3.25”, H 1.25	UL
WH7-230-L	230VAC	220W	0ºF (-18ºC)	158ºF (70ºC	L 19.25”, W 1.72”, H 1”	UL
WH8-120-L	120VAC	220W	0ºF (-18ºC)	158ºF (70ºC	L 19.25”, W 1.72”, H 1”	UL
WH8-230-L	230VAC	220W	0ºF (-18ºC)	158ºF (70ºC	L 19.25”, W 1.72”, H 1”	UL
WH22-120-L	120VAC	35W	0ºF (-18ºC)	158ºF (70ºC)	L 5.5”, W 1”, H 1”	UL
WH22-120-C	120VAC	35W	0ºF (-18ºC)	158ºF (70ºC)	L 3.3”, W 1.75”, H 1”	UL
WH33-120-L	120VAC	64W	0ºF (-18ºC)	158ºF (70ºC)	L 6.5”, W 1.5”, H 1”	UL
WH33-120-C	120VAC	64W	0ºF (-18ºC)	158ºF (70ºC)	L 3.82”, W 3.1”, H 1”	UL
WH41-UNV-L	120-277VAC	64W	0ºF (-18ºC)	158ºF (70ºC	L 9.48”, W 1.41”, H 1.02	UL
WH43-UNV-L	120-277VAC	100W	0ºF (-18ºC)	158ºF (70ºC	L 9.48”, W 1.41”, H 1.02	UL
WH44-UNV-L	120-277VAC	100W	0ºF (-18ºC)	158ºF (70ºC	L 9.48”, W 2.25”, H 1.22	UL
WorkHorse Ballast						
RHA-UNV-226-C	120-277VAC	57W	-20ºF (-30ºC)	167ºF (75ºC)	L 5.1”, W 2.4”, H 1” (4.3”CASE)	cULus
SugarCube Ballast						
SC-120-287-CUV	120VAC	17W	32ºF (-18ºC)	158ºF (70ºC)	L 3.07”, W 1.46”, H 1”	cULus
SC-230-287	230VAC	17W	32ºF (-18ºC)	158ºF (70ºC)	L 3.07”, W 1.46”, H 1”	cULus

UL Listed Ballast / Lamp Combinations

- Locate your lamp model in the left column, sorted by the type and size
- Find the corresponding Fulham ballast and wire diagram in the right columns, according to the number of lamps and start type.
- Wiring diagrams for workhorse and FEP models located on pages 12 - 14.

UV C LAMPS/ GERMICIDAL	WATTS	LAMP ARC CURRENT (mA)	INSTANT START BALLAST / WIRING DIAGRAM #				RAPID / PROGRAM START BALLAST	
			1 LAMP	2 LAMP	3 LAMP	4 LAMP	1 LAMP	2 LAMP
LINEAR LAMPS (T5)								
GPH212T5L GPH212T5VH	10W	0.425	N/A	WH44, Diagram #11	N/A	N/A	N/A	N/A
GPH287T5L GPH287T5VH	14W	0.425	N/A	WH44, Diagram #11	N/A	N/A	N/A	N/A
GPH303T5L GPH303T5VH	15W	0.425	N/A	WH44, Diagram #11	N/A	N/A	N/A	N/A
G10T5VH/C	17W	0.425	N/A	WH44, Diagram #11	N/A	N/A	N/A	N/A
G10T5VH	17W	0.425	N/A	WH44, Diagram #11	N/A	N/A	N/A	N/A
GPH357T5L GPH357T5VH	17W	0.425	N/A	WH44, Diagram #11	N/A	N/A	N/A	N/A
GPH436T5L GPH436T5VH	21W	0.425	N/A	WH44, Diagram #11	N/A	N/A	N/A	N/A
GSL692T5L GLS692T5VH	32W	0.425	N/A	WH44, Diagram #11	N/A	N/A	N/A	N/A
GPH793T5L GPH793T5VH	38W	0.425	N/A	WH44, Diagram #11	N/A	N/A	N/A	N/A
G36T5L G36T5VH	41W	0.425	N/A	WH44, Diagram #11	N/A	N/A	N/A	N/A
GPH843T5L GPH843T5VH	41W	0.425	N/A	WH44, Diagram #11	N/A	N/A	N/A	N/A
T5HO LAMPS								
GPH846T5L/HO GPH846T5VH/HO	90W	0.8	WH5, Diagram #12	N/A	N/A	N/A	N/A	N/A
GPH893T5L/HO GPH893T5VH/HO	95W	0.8	WH5, Diagram #12	N/A	N/A	N/A	N/A	N/A
LINEAR LAMPS (T6)								
GPH610T6L/4P	50W	1.0	WH5, Diagram #12	N/A	N/A	N/A	N/A	N/A
GPH1016T6L/4P	90W	1.0	WH7, Diagram #10	N/A	N/A	N/A	N/A	N/A
GPH1270T6L/4P	120W	1.0	WH7, Diagram #10	N/A	N/A	N/A	N/A	N/A
GPH1549T6L/4P	150W	1.0	WH7, Diagram #10	N/A	N/A	N/A	N/A	N/A
U-SHAPED LAMPS								
GU76-10T5L GU76- 10T5VH	17W	0.425	N/A	WH44, Diagram #11	N/A	N/A	N/A	N/A
GU22-10T5L GU22- 10T5VH	17W	0.425	N/A	WH44, Diagram #11	N/A	N/A	N/A	N/A

***Please Note:** Ballast recommendations apply to both -L and -VH lamp versions.

UL Listed Ballast / Lamp Combinations

- Locate your lamp model in the left column, sorted by the type and size
- Find the corresponding Fulham ballast and wire diagram in the right columns, according to the number of lamps and start type.
- Wiring diagrams for workhorse and FEP models located on pages 12 - 14.

UV C LAMPS/ GERMICIDAL	WATTS	LAMP ARC CURRENT (mA)	INSTANT START BALLAST / WIRING DIAGRAM #				RAPID / PROGRAM START BALLAST	
			1 LAMP	2 LAMP	3 LAMP	4 LAMP	1 LAMP	2 LAMP
U-SHAPED LAMPS (Continued...)								
GU22-390T5L GU22- 390T5VH	36W	0.425	N/A	WH44, Diagram #11	N/A	N/A	N/A	N/A
GU76-390T5L GU76- 390T5VH	37W	0.425	N/A	WH44, Diagram #11	N/A	N/A	N/A	N/A
GU76-36T5L GU76- 36T5VH	41W	0.425	N/A	WH44, Diagram #11	N/A	N/A	N/A	N/A
GU22-36T5L GU22- 36T5VHL	41W	0.425	N/A	WH44, Diagram #11	N/A	N/A	N/A	N/A

***Please Note:** Ballast recommendations apply to both -L and -VH lamp versions.

cULus Listed Ballast / Lamp Combinations

- Locate your lamp model in the left column, sorted by the type and size
- Find the corresponding Fulham ballast and wire diagram in the right columns, according to the number of lamps and start type.
- Wiring diagrams for workhorse and FEP models located on pages 12 - 14.

UV C LAMPS/ GERMICIDAL	WATTS	LAMP ARC CURRENT (mA)	INSTANT START BALLAST / WIRING DIAGRAM #				RAPID / PROGRAM START BALLAST	
			1 LAMP	2 LAMP	3 LAMP	4 LAMP	1 LAMP	2 LAMP
LINEAR LAMPS								
GPH212T5L GPH212T5VH	10W	0.425	N/A	N/A	N/A	N/A	SC-120-287-CUV SHS1-UNV-C-I SHS5-024-C	SHS1-UNV-C-I SHS5-024-C
GPH287T5L GPH287T5VH	14W	0.425	N/A	N/A	N/A	N/A	SC-120-287-CUV SHS1-UNV-C-I SHS5-024-C	SHS1-UNV-C-I SHS5-024-C
GPH303T5L GPH303T5VH	15W	0.425	N/A	N/A	N/A	N/A	SC-120-287-CUV SHS1-UNV-C-I SHS5-024-C	SHS1-UNV-C-I SHS5-024-C
GPH357T5L GPH357T5VH	17W	0.425	N/A	N/A	N/A	N/A	SC-120-287-CUV SHS1-UNV-C-I SHS5-024-C	SHS1-UNV-C-I SHS5-024-C
GPH436T5L GPH436T5VH	21W	0.425	N/A	N/A	N/A	N/A	SC-120-287-CUV SHS1-UNV-C-I SHS5-024-C	SHS1-UNV-C-I SHS5-024-C
GPH793T5L GPH793T5VH	38W	0.425	N/A	N/A	N/A	N/A	SC-120-287-CUV SHS1-UNV-C-I SHS5-024-C	N/A
GPH843T5L GPH843T5VH	41W	0.425	N/A	N/A	N/A	N/A	SC-120-287-CUV SHS1-UNV-C-I SHS5-024-C	N/A
GPHHA1554T6L	320W	2.1	N/A	N/A	N/A	N/A	SHD21-230-L-I DIMMING	N/A
U - SHAPED LAMPS								
GU76-10T5L GU76- 10T5VH	17W	0.425	N/A	N/A	N/A	N/A	SHS1-UNV-C-I SHS5-024-C	SHS1-UNV-C-I SHS5-024-C
GU22-10T5L GU22- 10T5VH	17W	0.425	N/A	N/A	N/A	N/A	SHS1-UNV-C-I SHS5-024-C	SHS1-UNV-C-I SHS5-024-C
GU22-390T5L GU22- 390T5VH	36W	0.425	N/A	N/A	N/A	N/A	SHS1-UNV-C-I SHS5-024-C	N/A
GU76-36T5L GU76- 36T5VH	41W	0.425	N/A	N/A	N/A	N/A	SHS1-UNV-C-I SHS5-024-C	N/A
GU22-36T5L GU22- 36T5VHL	41W	0.425	N/A	N/A	N/A	N/A	SHS1-UNV-C-I SHS5-024-C	N/A

***Please Note:** Ballast recommendations apply to both -L and -VH lamp versions.

cULus and CE Listed Ballast / Lamp Combinations

- Locate your lamp model in the left column, sorted by the type and size
- Find the corresponding Fulham ballast and wire diagram in the right columns, according to the number of lamps and start type.
- Wiring diagrams for workhorse and FEP models located on pages 12 - 14.

UV C LAMPS/ GERMICIDAL	WATTS	LAMP ARC CURRENT (mA)	INSTANT START BALLAST / WIRING DIAGRAM #				RAPID / PROGRAM START BALLAST	
			1 LAMP	2 LAMP	3 LAMP	4 LAMP	1 LAMP	2 LAMP
LINEAR LAMPS (T5)								
GPH212T5L GPH212T5VH	10W	0.425	N/A	N/A	N/A	N/A	SHS2-MLT-L	N/A
GPH287T5L GPH287T5VH	14W	0.425	N/A	N/A	N/A	N/A	SHS2-MLT-L	N/A
GPH303T5L GPH303T5VH	15W	0.425	N/A	N/A	N/A	N/A	SHS2-MLT-L	N/A
GPH357T5L GPH357T5VH	17W	0.425	N/A	N/A	N/A	N/A	SHS2-MLT-L	N/A
GPH436T5L GPH436T5VH	21W	0.425	N/A	N/A	N/A	N/A	SHS2-MLT-L	N/A
GPH793T5L GPH793T5VH	38W	0.425	N/A	N/A	N/A	N/A	SHS2-MLT-L	SHS14-UNV-H
GPH843T5L GPH843T5VH	41W	0.425	N/A	N/A	N/A	N/A	SHS2-MLT-L	SHS14-UNV-H
GPH1148T5L GPH1148T5VH	55W	0.425	N/A	N/A	N/A	N/A	SHS14-UNV-H	SHS14-UNV-H
GPH1554T5L GPH1554T5VH	75W	0.425	N/A	N/A	N/A	N/A	SHS14-UNV-H	SHS14-UNV-H
GPH1630T5L GPH1630T5VH	79W	0.425	N/A	N/A	N/A	N/A	SHS14-UNV-H	SHS14-UNV-H
T5HO LAMPS								
GPH436T5L/HO GPH436T5VH/HO	48W	0.8	N/A	N/A	N/A	N/A	SHS11-UNV-H	SHS11-UNV-H
GHO36T5L GHO36T5VH	87W	0.8	N/A	N/A	N/A	N/A	SHS11-UNV-H	SHS11-UNV-H
GPH846T5L/HO GPH846T5VH/HO	90W	0.8	N/A	N/A	N/A	N/A	SHS11-UNV-H SHS15-UNV-H	SHS11-UNV-H SHS15-UNV-H
GPH893T5L/HO GPH893T5VH/HO	95W	0.8	N/A	N/A	N/A	N/A	SHS11-UNV-H SHS15-UNV-H	SHS11-UNV-H SHS15-UNV-H
GHO64T5VH	155W	0.8	N/A	N/A	N/A	N/A	SHS11-UNV-H SHS15-UNV-H	SHS15-UNV-H
LINEAR LAMPS (T6)								
GPH610T6L/4P/HO	50W	1.0	N/A	N/A	N/A	N/A	SHS10-UNV-H	N/A
GPH1016T6L/4P/HO	90W	1.0	N/A	N/A	N/A	N/A	SHS10-UNV-H	N/A
GPH1270T6L/4P/HO	120W	1.0	N/A	N/A	N/A	N/A	SHS10-UNV-H	N/A
GPH1549T6L/4P/HO	150W	1.0	N/A	N/A	N/A	N/A	SHS10-UNV-H	N/A

***Please Note:** Ballast recommendations apply to both -L and -VH lamp versions.

Fulham Approved Ballast / Lamp Combinations

- Locate your lamp model in the left column, sorted by the type and size
- Find the corresponding Fulham ballast and wire diagram in the right columns, according to the number of lamps and start type.
- Wiring diagrams for workhorse and FEP models located on pages 12 - 14.

UV C LAMPS/ GERMICIDAL	WATTS	LAMP ARC CURRENT (mA)	INSTANT START BALLAST / WIRING DIAGRAM #				RAPID / PROGRAM START BALLAST	
			1 LAMP	2 LAMP	3 LAMP	4 LAMP	1 LAMP	2 LAMP
LINEAR LAMPS (T5)								
GPH212T5L GPH212T5VH	10W	0.425	WH43, Diagram #10 WH33, Diagram #14	WH33, Diagram #11	WH8, Diagram #25	WH7, Diagram #7	N/A	N/A
GPH287T5L GPH287T5VH	14W	0.425	WH43, Diagram #10 WH33, Diagram #14	WH33, Diagram #11	WH8, Diagram #25	WH7, Diagram #7	N/A	N/A
GPH295T5L	14W	0.425	N/A	N/A	N/A	N/A	SHS1-UNV-C-I	SHS1-UNV-C-I
GPH303T5L GPH303T5VH	15W	0.425	WH43, Diagram #10 WH33, Diagram #14	WH33, Diagram #11	WH8, Diagram #25	WH7, Diagram #7	SC-120-287-CUV	N/A
G10T5VH	17W	0.425	WH43, Diagram #10 WH33, Diagram #14	WH33, Diagram #11	WH8, Diagram #25	WH7, Diagram #7	N/A	N/A
GPH357T5L GPH357T5VH	17W	0.425	WH43, Diagram #10 WH33, Diagram #14	WH33, Diagram #11	WH8, Diagram #25	WH7, Diagram #7	SC-120-287-CUV	N/A
G10T5L	17W	0.425	WH5, Diagram #14	WH33, Diagram #11	WH7, Diagram #8	WH7, Diagram #7	N/A	N/A
GPH436T5L GPH436T5VH	21W	0.425	WH43, Diagram #10 WH33, Diagram #14	WH33, Diagram #11	WH8, Diagram #25	WH7, Diagram #7	N/A	N/A
G24T5L	25W	0.425	WH5, Diagram #14	WH33, Diagram #11	WH7, Diagram #8	WH7, Diagram #7	N/A	N/A
GSL692T5L GSL692T5VH	32W	0.425	WH43, Diagram #10 WH33, Diagram #14	WH33, Diagram #11	WH8, Diagram #25	WH7, Diagram #7	N/A	N/A
GPH793T5L GPH793T5VH	38W	0.425	WH43, Diagram #1 WH33, Diagram #14	WH5, Diagram #11	WH8, Diagram #25	WH7, Diagram #7	N/A	N/A
G36T5L G36T5VH	41W	0.425	WH43, Diagram #1 WH33, Diagram #14 WH5, Diagram #14	WH5, Diagram #11	WH8, Diagram #25 WH7, Diagram #8	WH7, Diagram #7	N/A	N/A
GPH843T5L GPH843T5VH	41W	0.425	WH43, Diagram #1 WH33, Diagram #14	WH5, Diagram #11	WH8, Diagram #25	WH7, Diagram #7	N/A	N/A
G48T5L G48T5VH	55W	0.425	WH43, Diagram #1 WH33, Diagram #14	WH5, Diagram #11 WH44, Diagram #11	WH8, Diagram #25	WH7, Diagram #7	N/A	N/A
GPH1148T5L GPH1148T5VH	55W	0.425	WH43, Diagram #1 WH33, Diagram #14	WH5, Diagram #11 WH44, Diagram #11	WH8, Diagram #25	WH7, Diagram #7	N/A	N/A
G48T5L	55W	0.425	WH5, Diagram #14	WH5, Diagram #11	WH7, Diagram #8	N/A	N/A	N/A
G64T5L G64T5VH	75W	0.425	WH5, Diagram #14 WH6, Diagram #10 WH43, Diagram #10	WH5, Diagram #22 WH44, Diagram #11	WH8, Diagram #25	N/A	N/A	N/A
GPH1554T5L GPH1554T5VH	75W	0.425	WH5, Diagram #14 WH6, Diagram #10 WH43, Diagram #10	WH5, Diagram #22 WH44, Diagram #11	WH8, Diagram #25	N/A	N/A	N/A
G48T5L	75W	0.425	WH5, Diagram #14	WH8, Diagram #22	N/A	N/A	N/A	N/A
G67T5L G67T5VH	79W	0.425	WH5, Diagram #14 WH6, Diagram #10 WH43, Diagram #10	WH5, Diagram #22	WH8, Diagram #25	N/A	N/A	N/A
GPH1630T5L GPH1630T5VH	79W	0.425	WH5, Diagram #14 WH6, Diagram #10 WH43, Diagram #10	WH5, Diagram #22	WH8, Diagram #25	N/A	N/A	N/A
G67T5L	79W	0.425	WH5, Diagram #14	WH8, Diagram #22	N/A	N/A	N/A	N/A

***Please Note:** Ballast recommendations apply to both -L and -VH lamp versions.

Fulham Approved Ballast / Lamp Combinations

- Locate your lamp model in the left column, sorted by the type and size
- Find the corresponding Fulham ballast and wire diagram in the right columns, according to the number of lamps and start type.
- Wiring diagrams for workhorse and FEP models located on pages 12 - 14.

UV C LAMPS/ GERMICIDAL	WATTS	LAMP ARC CURRENT (mA)	INSTANT START BALLAST / WIRING DIAGRAM #				RAPID / PROGRAM START BALLAST	
			1 LAMP	2 LAMP	3 LAMP	4 LAMP	1 LAMP	2 LAMP
T5/T6 AMALGAM LAMPS								
GPHHA357T6	65W	2.1	N/A	N/A	N/A	N/A	SHD21-230-L-I	N/A
GPHHA840T6	140W	2.1	N/A	N/A	N/A	N/A	SHD21-230-L-I	N/A
GPHHA843T6	172W	2.1	N/A	N/A	N/A	N/A	SHD21-230-L-I	N/A
GPHHA1145T6	200W	2.1	N/A	N/A	N/A	N/A	SHD21-230-L-I	N/A
GPHHA1000T6	207W	2.1	N/A	N/A	N/A	N/A	SHD21-230-L-I	N/A
GPHHA1570T6	315W	2.1	N/A	N/A	N/A	N/A	SHD21-230-L-I	N/A
GPHHA1554T6	320W	2.1	N/A	N/A	N/A	N/A	SHD21-230-L-I	N/A
GPHHA1578T6	325W	2.0	N/A	N/A	N/A	N/A	SHD21-230-L-I	N/A
T5HO LAMPS								
GHO436T5L	36W	0.8	WH33, Diagram #12 WH5, Diagram #12	WH7, Diagram #11	N/A	N/A	SHS11-UNV-H SHS3-MLT-L	SHS11-UNV-H
GPH436T5L/HO GPH436T5VH/HO	48W	0.8	WH33, Diagram #12 WH5, Diagram #12	WH7, Diagram #11 WH8, Diagram #23	FEP-600L, Diagram #8	N/A	N/A	N/A
GXO436T5L	48W	0.8	WH33, Diagram #12 WH5, Diagram #12	WH7, Diagram #11	N/A	N/A	SHS11-UNV-H SHS3-MLT-L	SHS11-UNV-H
GHO36T5L	75W	0.8	WH5, Diagram #12	WH7, Diagram #11	N/A	N/A	SHS11-UNV-H	SHS11-UNV-H
GHO846T5L	75W	0.8	WH5, Diagram #12	WH7, Diagram #11	N/A	N/A	SHS11-UNV-H	SHS11-UNV-H
GHO893T5L	85W	0.8	WH5, Diagram #12	WH7, Diagram #11	N/A	N/A	SHS11-UNV-H	SHS11-UNV-H
GXO36T5L	87W	0.8	WH5, Diagram #12	WH7, Diagram #11	N/A	N/A	SHS11-UNV-H SHS15-UNV-H	SHS11-UNV-H SHS15-UNV-H
GXO846T5L	87W	0.8	WH5, Diagram #12	WH7, Diagram #11	N/A	N/A	SHS11-UNV-H SHS15-UNV-H	SHS11-UNV-H SHS15-UNV-H
GHO36T5L GHO36T5VH	87W	0.8	WH5, Diagram #12	WH7, Diagram #11 WH8, Diagram #23	FEP-600L, Diagram #8	N/A	N/A	N/A
GPH846T5L/HO GPH846T5VH/HO	90W	0.8	N/A	WH7, Diagram #11 WH8, Diagram #23	FEP-600L, Diagram #8	N/A	N/A	N/A
GPH893T5L/HO GPH893T5VH/HO	95W	0.8	N/A	WH7, Diagram #11 WH8, Diagram #23	N/A	N/A	N/A	N/A
GXO893T5L	95W	0.8	WH5, Diagram #12	WH7, Diagram #11	N/A	N/A	SHS11-UNV-H SHS15-UNV-H	SHS11-UNV-H SHS15-UNV-H

***Please Note:** Ballast recommendations apply to both -L and -VH lamp versions.

Fulham Approved Ballast / Lamp Combinations

- Locate your lamp model in the left column, sorted by the type and size
- Find the corresponding Fulham ballast and wire diagram in the right columns, according to the number of lamps and start type.
- Wiring diagrams for workhorse and FEP models located on pages 12 - 14.

UV C LAMPS/ GERMICIDAL	WATTS	LAMP ARC CURRENT (mA)	INSTANT START BALLAST / WIRING DIAGRAM #				RAPID / PROGRAM START BALLAST	
			1 LAMP	2 LAMP	3 LAMP	4 LAMP	1 LAMP	2 LAMP
T5HO LAMPS (continued...)								
GHO64T5L	145W	0.8	WH7, Diagram #14	N/A	N/A	N/A	SHS15-UNV-H	SHS15-UNV-H
GHO64T5VH	155W	0.8	WH7, Diagram #14	FEP-600L, Diagram #9	N/A	N/A	N/A	N/A
GXO64T5L	155W	0.8	WH7, Diagram #14	N/A	N/A	N/A	SHS15-UNV-H	SHS15-UNV-H
LINEAR LAMPS (T6)								
GPHHA843T6L	172W	2.1	FEP-600L, Diagram #12	N/A	N/A	N/A	SHD21-230-L-I Non-Dimming	N/A
GPHHA1000T6L	207W	2.1	FEP-600L, Diagram #12	N/A	N/A	N/A	SHD21-230-L-I Non-Dimming	N/A
GPHHA1554T6L	320W	2.1	FEP-600L, Diagram #12	N/A	N/A	N/A	N/A	N/A
U-SHAPED LAMPS								
GU22-390T5L GU22- 390T5VH	48W	0.425	WH33, Diagram #14 WH43, Diagram #10	WH5, Diagram #11	WH8, Diagram #25	WH7, Diagram #7	N/A	N/A
GU76-10T5L GU76- 10T5VH	75W	0.425	WH33, Diagram #14 WH43, Diagram #10	WH33, Diagram #11	WH8, Diagram #25	WH7, Diagram #7	N/A	N/A
GU22-10T5L GU22- 10T5VH L	79W	0.425	WH33, Diagram #14 WH43, Diagram #10	WH33, Diagram #11	WH8, Diagram #25	WH7, Diagram #7	N/A	N/A
GU76-390T5L GU76- 390T5VH	87W	0.425	WH33, Diagram #14 WH43, Diagram #10	WH5, Diagram #11	WH8, Diagram #25	WH7, Diagram #7	N/A	N/A
GU76-36T5L GU76- 36T5VH	90W	0.425	WH33, Diagram #14 WH43, Diagram #10	WH5, Diagram #11	WH8, Diagram #25	WH7, Diagram #7	N/A	N/A
GU22-36T5L GU22- 36T5VHL	95W	0.425	WH33, Diagram #14 WH43, Diagram #10	WH5, Diagram #11	WH8, Diagram #25	WH7, Diagram #7	N/A	N/A

***Please Note:** Ballast recommendations apply to both -L and -VH lamp versions.

Fulham UV Ballasts - Operation & Installation Tips

1. Connect both pin sets of the socket before connecting “RED” & “YELLOW” wires.
2. Ground case in accordance with the “National Electric Code”
3. With Linear lamp use a starting aid.
4. Ballast case temperature cannot exceed 70°C
5. Remote mounting distance varies with lamp type. Contact customer service.
6. Ballast cannot be used with dimmer switch but can be used with occupancy sensor. (Note: Sensor will shorten lamp life.)
7. Cap and insulate any unused red power wire. = Cap
8. When connecting two red power wires, they must be joined to make one wire before attaching to the socket
9. BLS (Black Leads with Studs) dimensions
   Stud length: 5/8", Stud Size: 8/32, Center to Center 2"
10. Running lamps in series will reduce the turn-on cycles of both lamps. (Configuration diagrams 4, 5, 6)

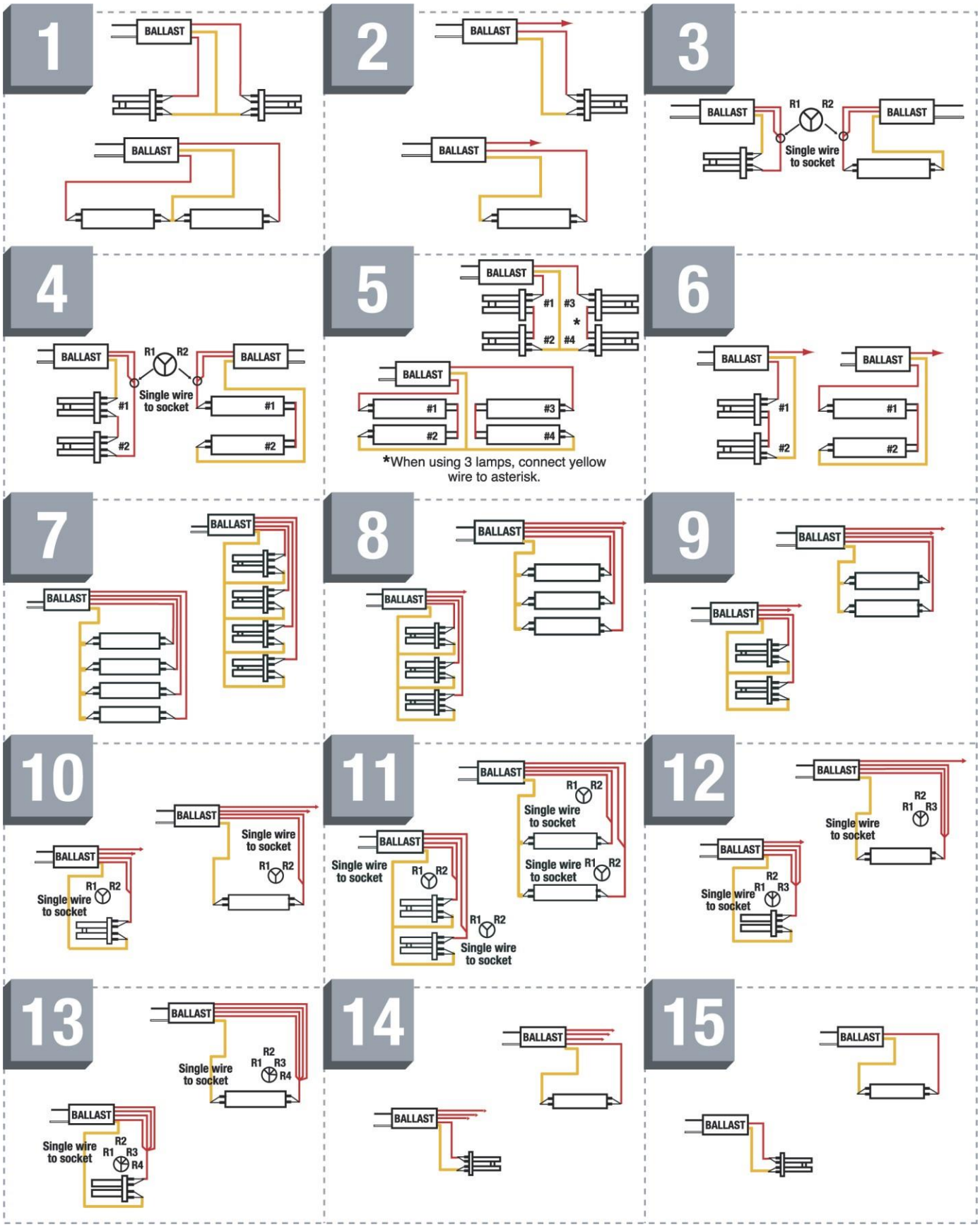

Fulham UV Ballasts - Operation & Installation Tips

1. Connect both pin sets of the socket before connecting “RED” & “YELLOW” wires.
2. Ground case in accordance with the “National Electric Code”
3. With Linear lamp use a starting aid.
4. Ballast case temperature cannot exceed 70°C
5. Remote mounting distance varies with lamp type. Contact customer service.
6. Ballast cannot be used with dimmer switch but can be used with occupancy sensor. (Note: Sensor will shorten lamp life.)
7. Cap and insulate any unused red power wire. = Cap
8. When connecting two red power wires, they must be joined to make one wire before attaching to the socket
9. BLS (Black Leads with Studs) dimensions
   Stud length: 5/8", Stud Size: 8/32, Center to Center 2"
10. Running lamps in series will reduce the turn-on cycles of both lamps. (Configuration diagrams 4, 5, 6)

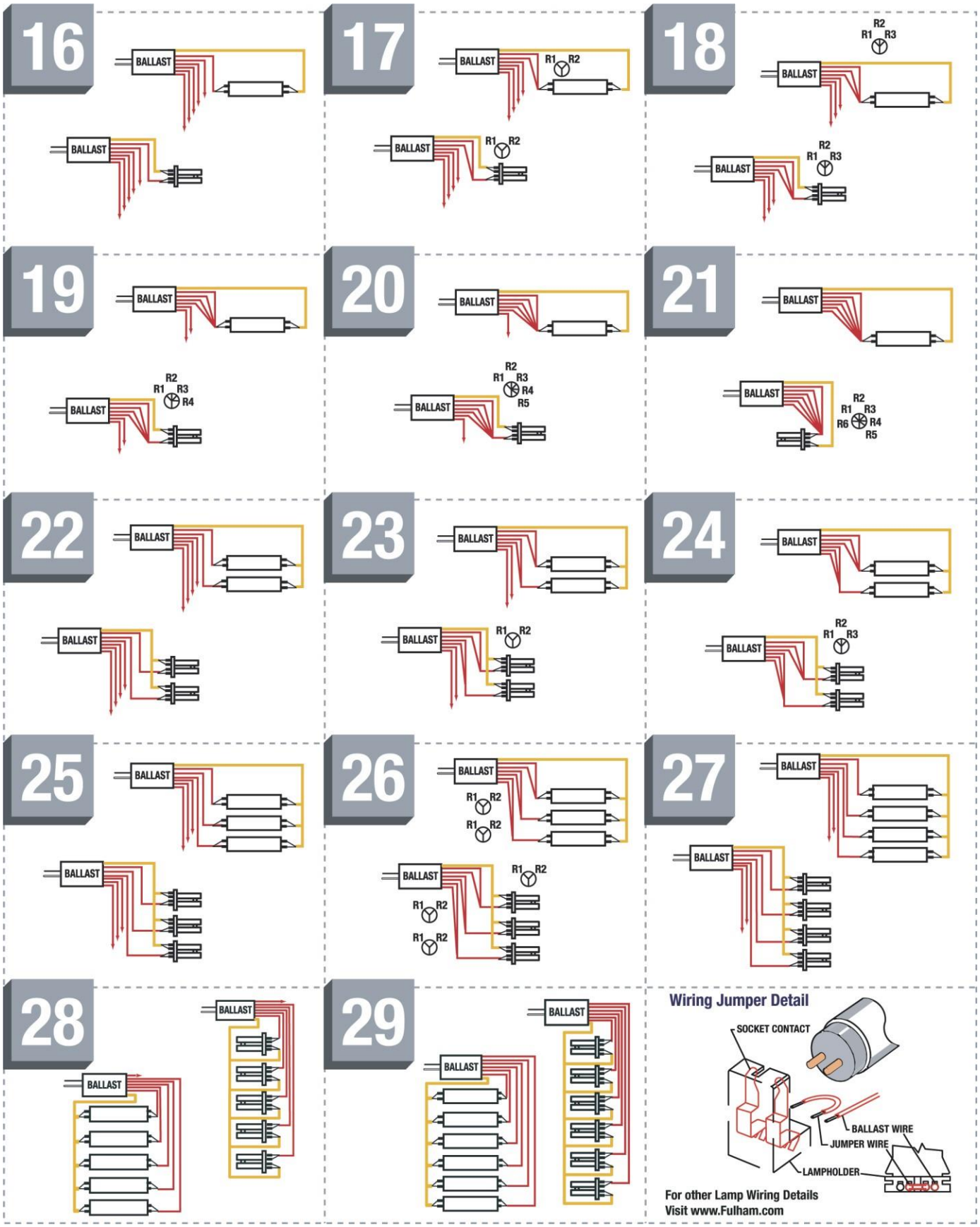

Fulham UV Ballasts - Operation & Installation Tips

1. For 4-pins lamps, ensure that you have determined the appropriate pair of pins that correspond to each filament. Once you've done this follow the appropriate wiring diagram that peratins to your application and wire in the filaments accordingly.
2. For 2-pins lamps, each pin will correspond to an internally shorted filament, using this information follow the appropriate wiring diagram that peratins to your application and wire in the filaments accordingly.

4- Pin (two pins on per side) Double Ended Lamp

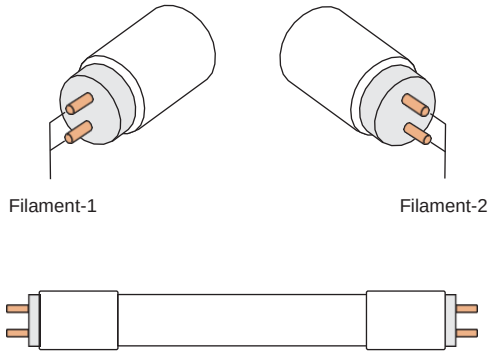

2-Pin (Single pin per side) Double Ended Lamp

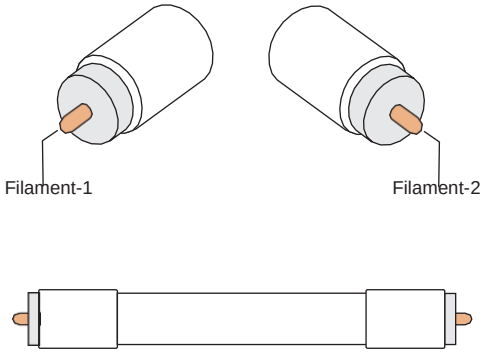

4-Pin Single Ended Lamp

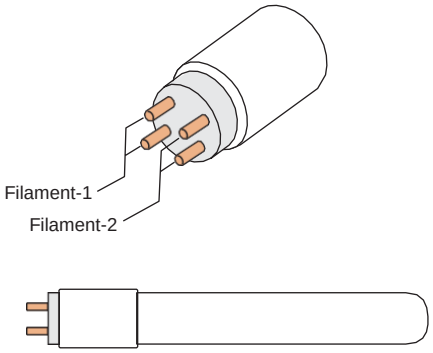

4-Pin Single Ended Lamp

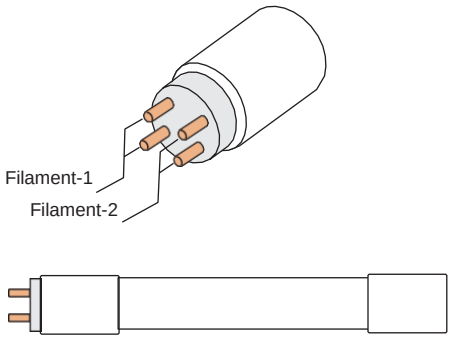

4-Pin Linear 2G7/2G11 Base Lamp

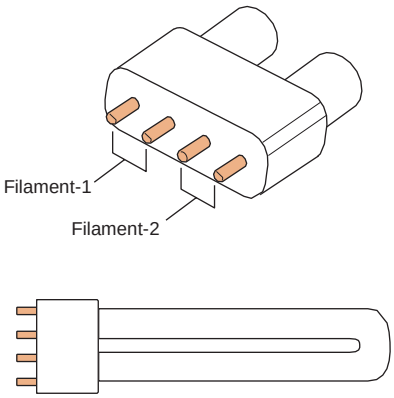

4-Pin G32 Base Lamp

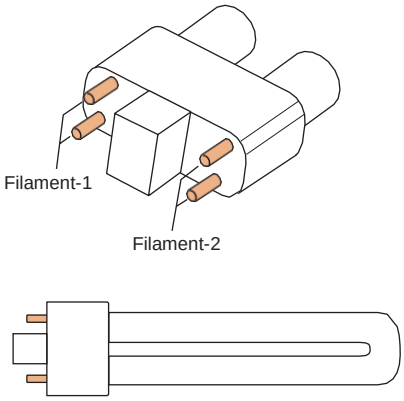
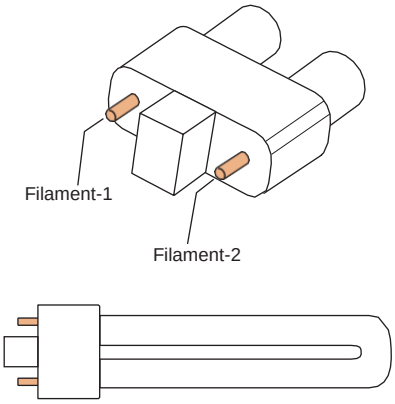
2-Pin G23/PL-S/GX23/ Base Lamp